ELECTRO-OPTICAL HIGH SPEED ADJUSTABLE FOCUSING ZONE PLATE

Filed June 28, 1963 2 Sheets-Sheet 1

FIG. 1

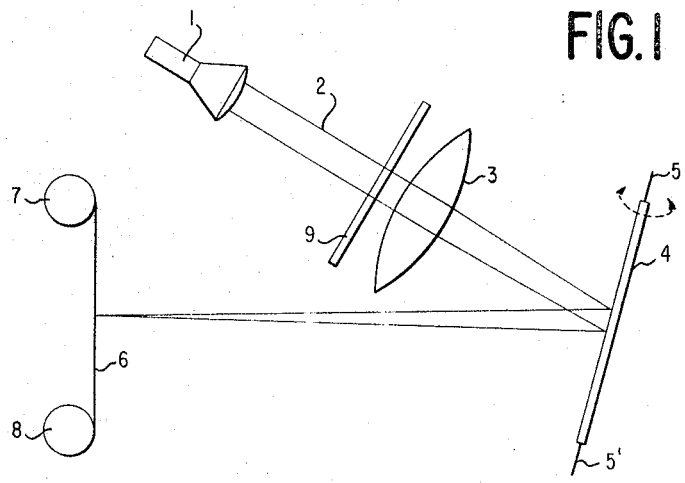

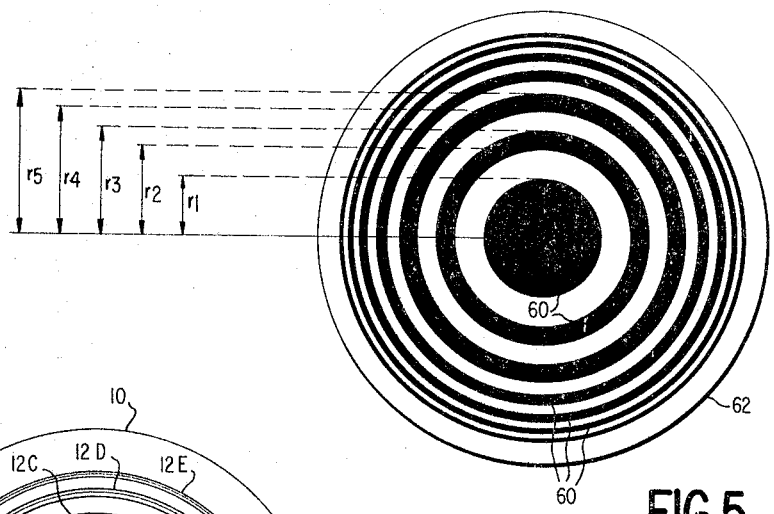

FIG. 5

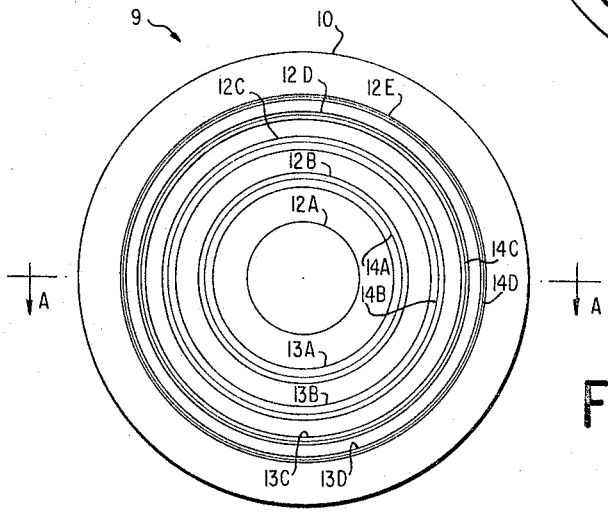

FIG. 2

INVENTORS
KURT M. KOSANKE
WERNER W. KULCKE
BY
Maurice Klitzman
ATTORNEY