US006808262B2

(12) **United States Patent**
Chapoy et al.

(10) **Patent No.: US 6,808,262 B2**
(45) **Date of Patent: Oct. 26, 2004**

(54) **MULTIFOCAL CONTACT LENS WITH ASPHERIC SURFACE**

(75) Inventors: **L. Lawrence Chapoy**, Barrington Hills, IL (US); **William Rovani**, Mount Prospect, IL (US); **John B. W. Lett**, San Diego, CA (US)

(73) Assignee: **Novartis AG**, Basel (CH)

(*) Notice: Subject to any disclaimer, the term of this patent is extended or adjusted under 35 U.S.C. 154(b) by 120 days.

(21) Appl. No.: **09/881,548**

(22) Filed: **Jun. 14, 2001**

(65) **Prior Publication Data**

US 2002/0036748 A1 Mar. 28, 2002

Related U.S. Application Data

(63) Continuation of application No. PCT/US99/29917, filed on Dec. 15, 1999.
(60) Provisional application No. 60/112,454, filed on Dec. 16, 1998.

(51) **Int. Cl.**[7] **G02C 7/04**
(52) **U.S. Cl.** **351/161**
(58) **Field of Search** 351/161

(56) **References Cited**

U.S. PATENT DOCUMENTS

1,955,047	A	4/1934	Beach
2,405,989	A	8/1946	Beach
2,869,422	A	1/1959	Cretin-Maitenaz
3,004,470	A	10/1961	Rühle
3,031,927	A	5/1962	Wesley
3,034,403	A	5/1962	Neefe
3,037,425	A	6/1962	De Carle
RE25,286	E	11/1962	De Carle
3,279,878	A	10/1966	Long
3,298,771	A	1/1967	Ratliff
3,472,581	A	10/1969	Bronstein
3,482,906	A	12/1969	Volk
3,614,218	A	10/1971	Bronstein
3,623,800	A	11/1971	Volk
3,662,040	A	5/1972	Urbach et al.
3,711,191	A	1/1973	Tagnon
3,726,587	A	4/1973	Kendall
3,794,414	A	2/1974	Wesley
3,866,249	A	2/1975	Flom
3,937,566	A	2/1976	Townsley
3,950,082	A	4/1976	Volk
4,010,496	A	3/1977	Neefe
RE29,229	E	5/1977	Girard et al.
4,055,378	A	10/1977	Feneberg et al.
4,073,579	A	2/1978	Deeg et al.
4,153,349	A	5/1979	Wichterle
4,162,122	A	7/1979	Cohen
4,195,919	A	4/1980	Shelton
4,199,231	A	4/1980	Evans
4,210,391	A	7/1980	Cohen
4,262,370	A	4/1981	Hartstein
4,274,717	A	6/1981	Davenport

(List continued on next page.)

FOREIGN PATENT DOCUMENTS

AU	A 52069/96	11/1996
EP	0 132 955 A2	2/1985

(List continued on next page.)

OTHER PUBLICATIONS

Anschutz, T., et al., "Evaluation of Hyperopic Photoablation Profiles", Journal of Refractive Surgery, vol. 14, No. 2 (suppl), Apr. 1998, pp. S192–S196.

(List continued on next page.)

Primary Examiner—Scott J. Sugarman
Assistant Examiner—Darryl J. Collins
(74) *Attorney, Agent, or Firm*—Jian Zhou; Robert Gorman; R. Scott Meece

(57) **ABSTRACT**

A contact lens is disclosed having a front surface and a back surface. The lens contains a continuously varying aspheric surface on one or more of these surfaces.
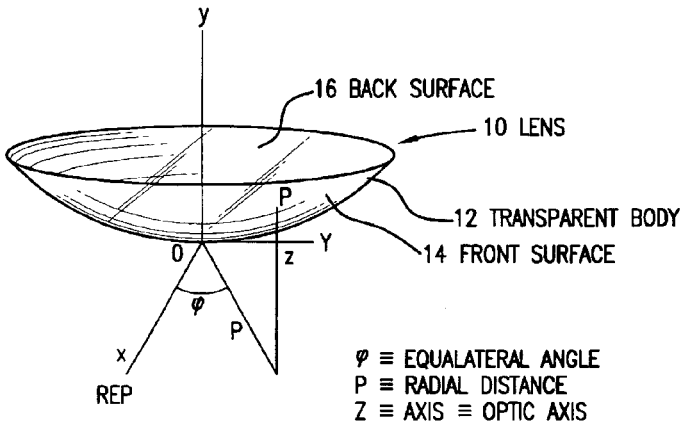
18 Claims, 5 Drawing Sheets