TRAINING APPARATUS HAVING VISUAL DISPLAY SYSTEM

Filed May 17, 1967 3 Sheets-Sheet 1

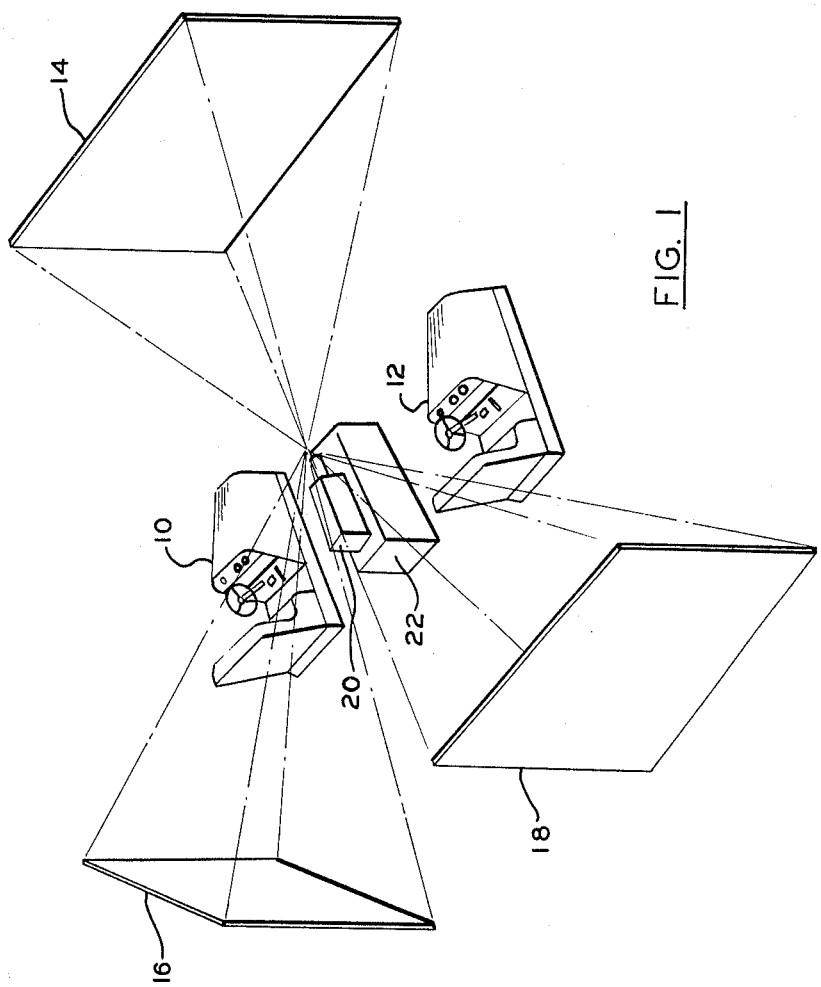


FIG. 1

DEREK JONES
RICHARD A. MECKLENBORG
EDWARD J. KITLER

INVENTORS

BY Francis h. Masselle