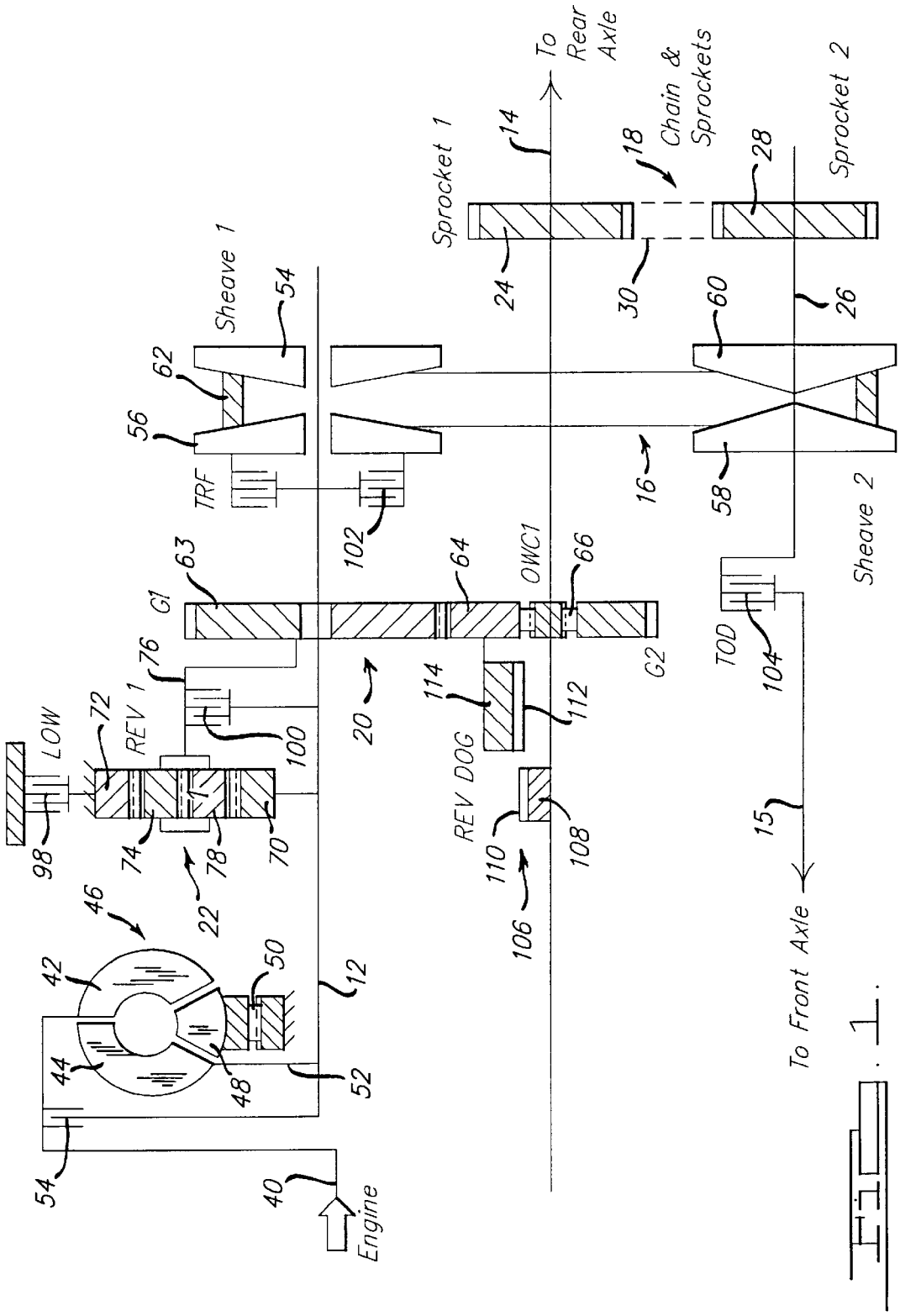
To Rear Axle
Chain & Sprockets
Sprocket 1
Sprocket 2
Sheave 1
Sheave 2
TRF
G1
G2
OWC1
REV 1
LOW
REV DOG
TOD
To Front Axle
Engine
14
18
28
24
30
26
60
54
62
56
16
58
102
63
64
66
76
72
100
20
114
112
98
74
78
70
22
110
108
106
15
104
46
42
50
12
44
48
52
54
40

FIG. 1.