United States Patent [19]

Kang et al.

[11] **Patent Number: 4,985,261**

[45] **Date of Patent: Jan. 15, 1991**

[54] **PROCESS FOR MICROWAVE BROWNING PROTEINACEOUS FIBROUS MEAT PRODUCTS**

[75] Inventors: **Young C. Kang**, Oakhurst; **Chee-Teck Tan**, Middletown; **Brian Byrne**, East Brunswick; **Lawrence L. Buckholz, Jr**, Middletown; **Marion A. Sudol**, Boonton; **Richard M. Boden**, Ocean, all of N.J.

[73] Assignee: **International Flavors & Fragrances Inc.**, New York, N.Y.

[21] Appl. No.: **535,524**

[22] Filed: **Jun. 8, 1990**

Related U.S. Application Data

[60] Continuation-in-part of Ser. No. 440,794, Nov. 24, 1989, Pat. No. 4,943,697, Ser. No. 166,062, Mar. 9, 1988, Pat. No. 4,795,649 which is a division of Ser. No. 356,503, May 25, 1989, which is a division of Ser. No. 295,450, Jan. 10, 1989, Pat. No. 4,882,184.

[51] **Int. Cl.**[5] **A23L 1/00**

[52] **U.S. Cl.** **426/243**; 426/262; 426/296; 426/641

[58] **Field of Search** ..... 426/243, 262, 305, 641, 426/99, 296; 219/10.55 M

[56] **References Cited**

U.S. PATENT DOCUMENTS

3,256,101	6/1966	Arns	99/221
3,949,094	4/1974	Johnson et al.	426/99
4,316,070	2/1982	Prosise et al.	219/10.55 E
4,448,791	5/1984	Fulde et al.	426/243
4,518,618	5/1985	Hsia et al.	426/262
4,735,812	8/1988	Bryson et al.	426/262
4,857,340	8/1989	Parliment et al.	426/107
4,882,184	11/1989	Buckholz et al.	426/243

OTHER PUBLICATIONS

Copson et al., "Browning Methods in Microwave Cooking", Agricultural and Food Chemistry, vol. 3, No. 5, May 1955 (pp. 424–427).

Primary Examiner—George Yeung
Attorney, Agent, or Firm—Arthur L. Liberman

[57] **ABSTRACT**

Described is a process for producing a cooked edibly browned storage-stable fibrous proteinaceous muscle tissue foodstuff including the steps of:

(a) providing a particulate flowable flavoring powder which contains individually discretely encapsulated Maillard reaction reagents with the reaction reagents being at least one encapsulated amino acid and at least one encapsulated sugar;

(b) providing an uncooked fibrous proteinaceous muscle tissue foodstuff containing more than 50% water;

placing in intimate the contact with at least part of the surface of the foodstuff, a flavor augmenting, imparting or enhancing quantity of the particulate flowable flavoring powder of (a); and

exposing the flavoring powder coated foodstuff surface to microwave powder-radiation for a period of time to cause the foodstuff to be edible

whereby the resulting product is caused to be edible as a foodstuff and the cooked fibrous proteinaceous muscle tissue is edibly browned. Optionally, the particulate flowable flavoring powder may be in the form of a slurry with a solvent composition which is capable of raising the dielectric constant of the foodstuff to be cooked whereby the foodstuff to be cooked is completely cooked and edibly browned in the period of time under 600 seconds.
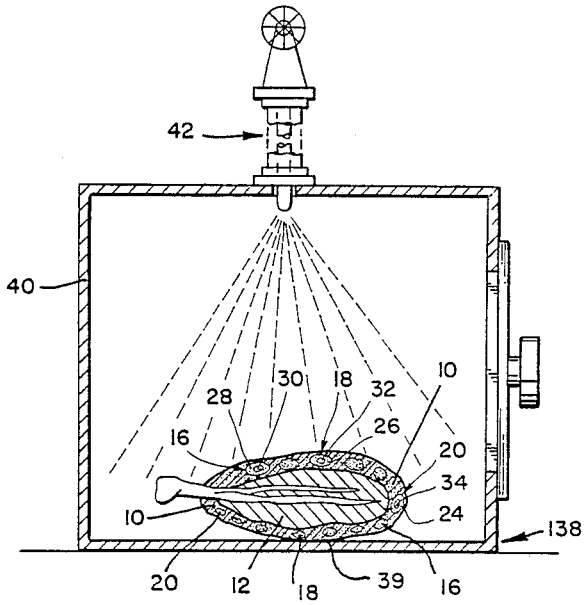
22 Claims, 8 Drawing Sheets