US008578561B2

(12) **United States Patent**
Chuang

(10) **Patent No.: US 8,578,561 B2**
(45) **Date of Patent: Nov. 12, 2013**

(54) **DUAL-AXIS HINGE AND PORTABLE DEVICE WITH THE SAME**

(75) Inventor: **Chih-Kuang Chuang**, New Taipei (TW)

(73) Assignee: **Shin Zu Shing Co., Ltd.**, New Taipei (TW)

(*) Notice: Subject to any disclaimer, the term of this patent is extended or adjusted under 35 U.S.C. 154(b) by 0 days.

(21) Appl. No.: **13/353,342**

(22) Filed: **Jan. 19, 2012**

(65) **Prior Publication Data**

US 2013/0187525 A1 Jul. 25, 2013

(51) **Int. Cl.**
E05D 7/00 (2006.01)

(52) **U.S. Cl.**
USPC **16/354**; 16/366

(58) **Field of Classification Search**
USPC 16/354, 366, 365, 368, 369, 370; 361/679.08, 679.11, 679.02, 679.15, 361/679.27; 455/90.3, 575.1, 575.3, 575.8; 379/433.12, 433.13; 348/373, 333.01, 348/333.06, 794
See application file for complete search history.

(56) **References Cited**

U.S. PATENT DOCUMENTS

2,206,739	A *	7/1940	Brogren et al.	16/354
4,916,926	A *	4/1990	Shieh	70/135
6,785,935	B2	9/2004	Ahn et al.	
6,925,684	B2 *	8/2005	Kang et al.	16/264
7,140,074	B2	11/2006	Han et al.	
7,414,834	B2	8/2008	Ukonaho et al.	
7,484,271	B2	2/2009	Oshima et al.	
7,832,057	B2 *	11/2010	Hoffman	16/367
2002/0038493	A1 *	4/2002	Ko et al.	16/303
2005/0050686	A1	3/2005	Kurokawa	
2008/0307608	A1	12/2008	Goto	
2009/0013500	A1 *	1/2009	Ueyama et al.	16/354
2009/0070961	A1	3/2009	Chung et al.	
2010/0071159	A1 *	3/2010	Myung	16/303
2011/0157780	A1 *	6/2011	Wang et al.	361/679.01
2011/0289728	A1 *	12/2011	Wang et al.	16/337

FOREIGN PATENT DOCUMENTS

TW	M361209	U1	7/2009
TW	M391012	U1	10/2010

* cited by examiner

Primary Examiner — Chuck Mah
(74) *Attorney, Agent, or Firm* — Alan Kamrath; Kamrath IP Lawfirm, P.A.

(57) **ABSTRACT**

A dual-axis hinge is mounted between a cover and a base of a portable device and has a connecting bracket, an upper rotating bracket, a lower rotating bracket, an upper active gear, a lower active gear and a transmission gear assembly. The connecting bracket is mounted between the upper and lower rotating brackets. The upper and lower active gears are connected respectively to the upper and lower rotating brackets. The transmission gear assembly is connected between the upper and lower active gears to adjust a velocity ratio of the upper and lower active gears. Therefore, the cover and the base align with each other without a drop whether or not the upper and lower active gears are the same in teeth number or whether or not the included angles between the upper and lower rotating brackets with the connecting bracket are the same.
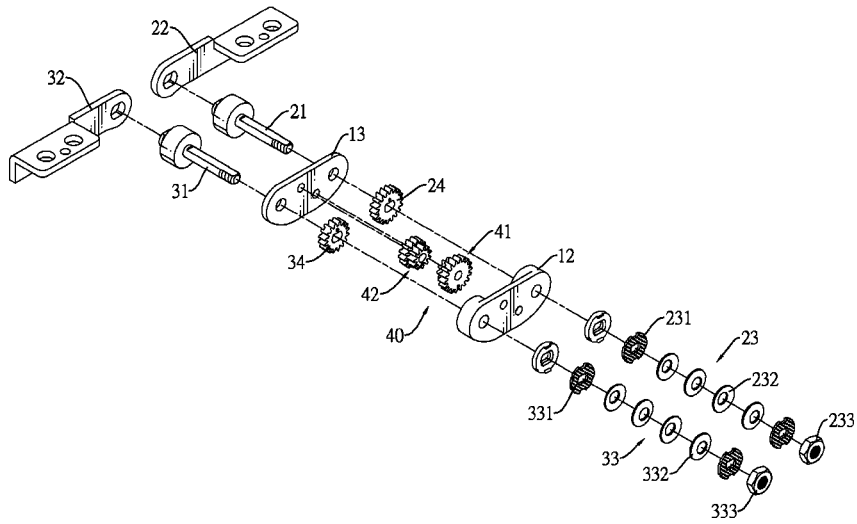
27 Claims, 11 Drawing Sheets