United States Patent [19]

Margolis et al.

[11] **4,072,761**

[45] **Feb. 7, 1978**

[54] **AROMATIZATION OF COFFEE PRODUCTS**

[75] Inventors: **Geoffrey Margolis**, Marysville; **Richard Tien-Szu Liu**, Worthington, both of Ohio

[73] Assignee: **Societe d'Assistance Technique pour Produits Nestle S.A.**, Lausanne, Switzerland

[21] Appl. No.: **634,487**

[22] Filed: **Nov. 24, 1975**

[51] **Int. Cl.**[2] **A23F 1/04**

[52] **U.S. Cl.** **426/387**; 55/87; 261/DIG. 26; 426/564; 426/594

[58] **Field of Search** 426/564, 386, 387, 594; 55/87; 261/DIG. 26

[56] **References Cited**

U.S. PATENT DOCUMENTS

1,144,193	6/1915	Haas	55/87 X
1,894,508	1/1933	Barthelemy	55/87 X
3,495,988	2/1970	Balassa	426/594 X
3,535,118	10/1970	Klein et al.	426/386
3,717,472	2/1973	Strobel	426/386 X
3,765,904	10/1973	de Roissart et al.	426/386 X
3,823,241	7/1974	Patel et al.	426/386
3,836,682	9/1974	Yadlowsky	426/386 X
3,903,312	9/1975	Clinton et al.	426/386 X
3,917,858	11/1975	Bos	426/594
3,939,291	2/1976	Katz	426/388 X

Primary Examiner—Frank W. Lutter
Assistant Examiner—Frank Sever
Attorney, Agent, or Firm—Watson, Leavenworth, Kelton & Taggart

[57] **ABSTRACT**

Coffee aroma gas is admixed with an absorbent comprising aqueous liquid and liquid edible oil under pressure to produce a foam. This foam may then be contacted with soluble coffee solids to effect their aromatization.
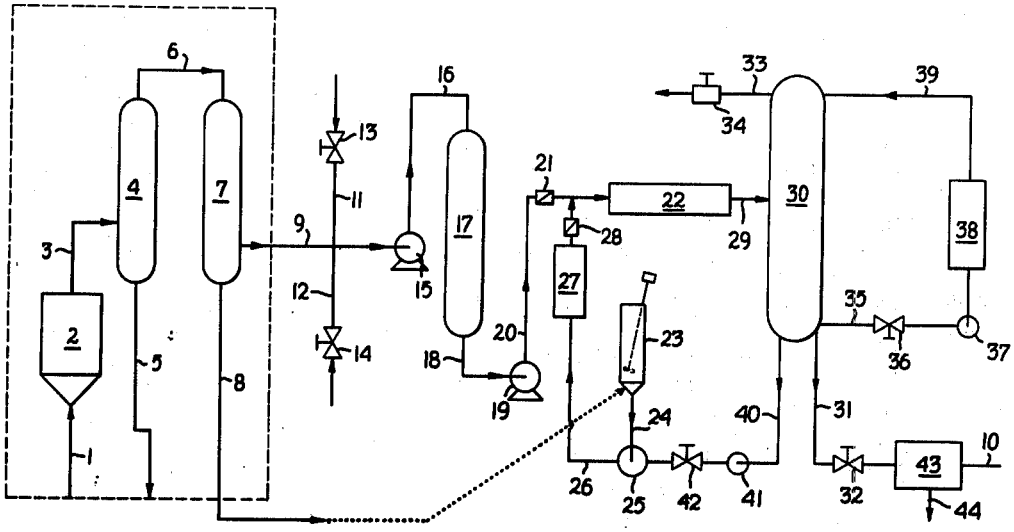
14 Claims, 1 Drawing Figure