FLAVORING DEVICE

Filed Jan. 26, 1968 3 Sheets-Sheet 1

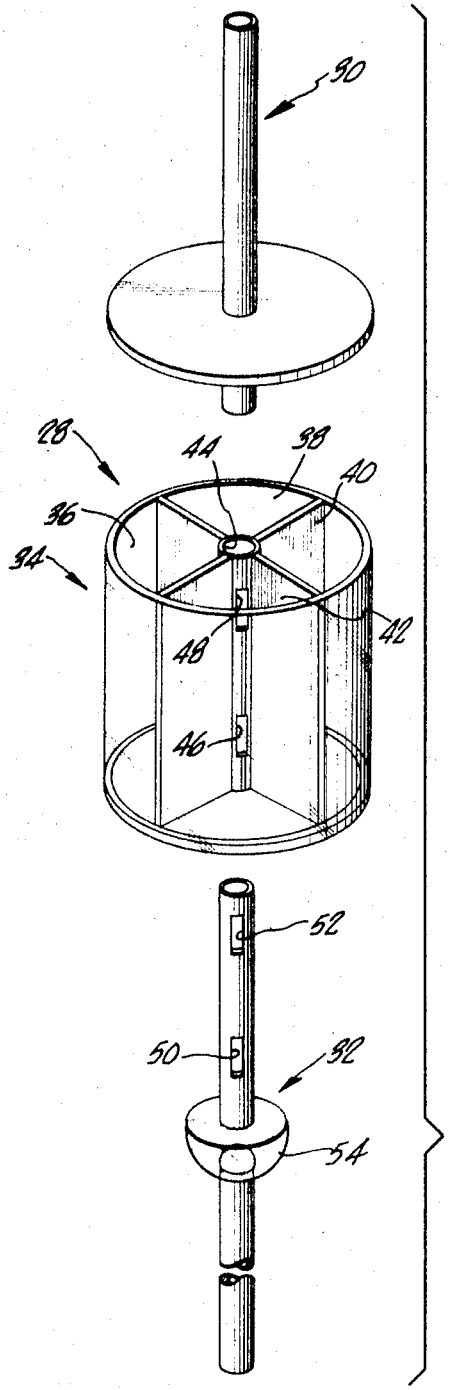

FIG. 2

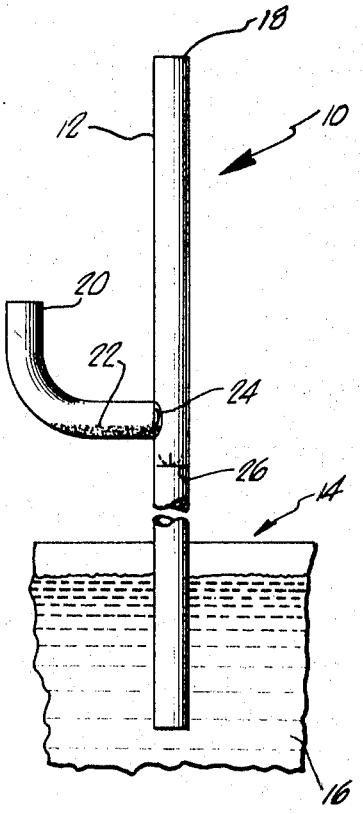

FIG. 1

INVENTORS:
DONALD L. COOK
DOUGLAS R. HANSEN
BY RICHARD L. GILLESPIE, SR.
Christie, Parker & Hale
ATTORNEYS.