METHOD OF CENTRIFUGALLY CASTING LAYERED CONTACT LENSES

Filed Oct. 5, 1967

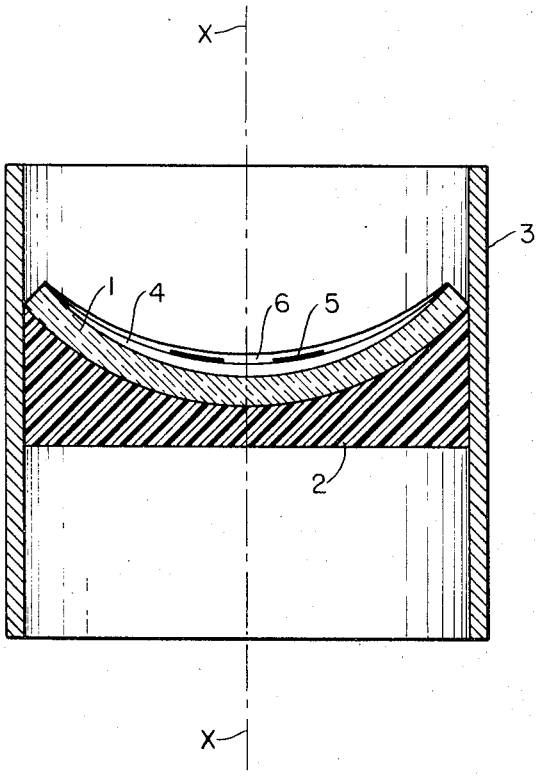

INVENTOR.
OTTO WICHTERLE
BY
Richard Low
Agt