Sept. 15, 1925. 1,554,161

R. W. HUBBARD

HINGE

Filed June 6, 1924 2 Sheets-Sheet 1

FIG. 1

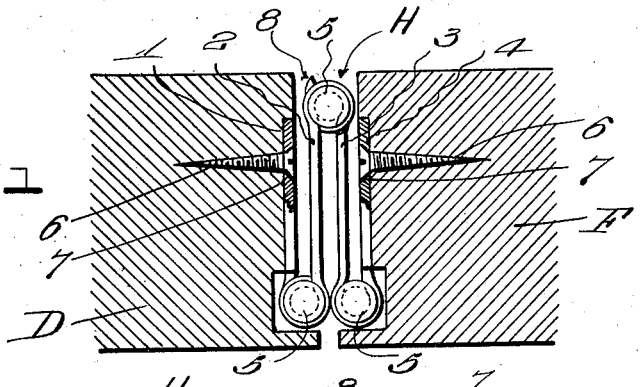

FIG. 2

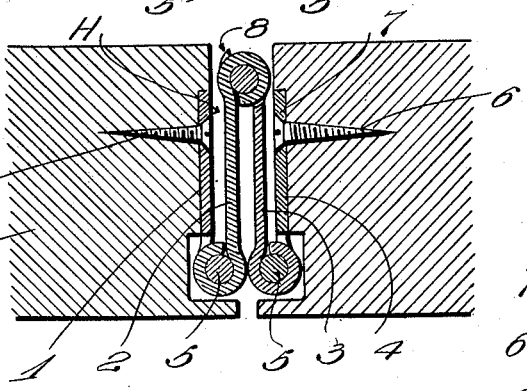

FIG. 3

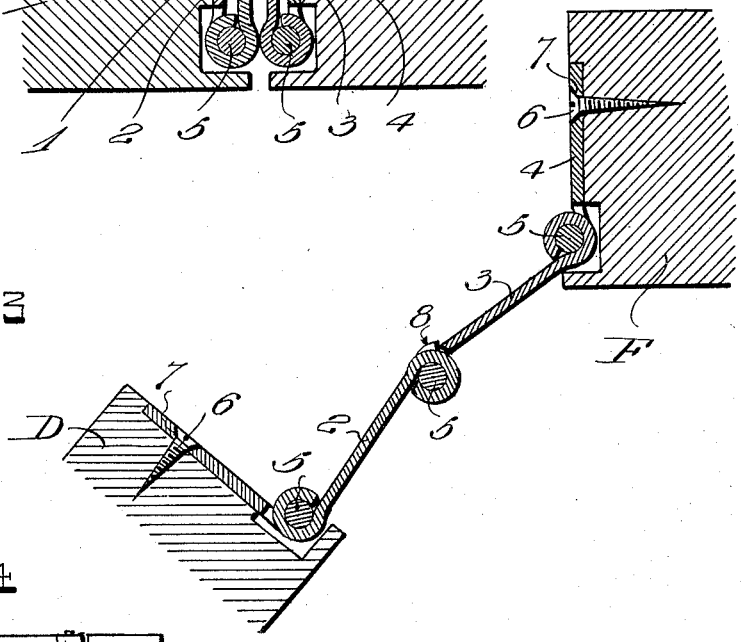

FIG. 4

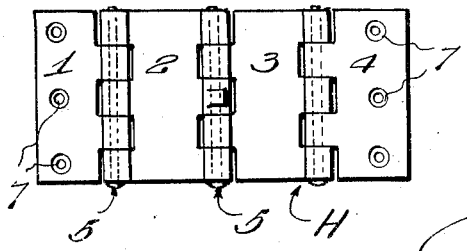

INVENTOR.
Richard W. Hubbard
BY
James J. Sheehy & Co.
ATTORNEYS.