US005253361A

United States Patent [19]

Thurman et al.

[11] Patent Number: 5,253,361

[45] Date of Patent: Oct. 12, 1993

[54] SYSTEM FOR ACCESSING A ROW OF TIME-DEPENDENT DATA BY REFERRING TO A COMPOSITE INDEX TABLE INDICATING PAGE LOCATIONS OF LINKED ROW LABELS

[75] Inventors: **Audree Thurman**, Phoenix; **Stanley Person**, Mesa; **Ronald Norden-Paul**, Mesa; **Richard Shelton**, Mesa, all of Ariz.

[73] Assignee: **Emtek Health Care Systems, Inc.**, Tempe, Ariz.

[21] Appl. No.: **408,178**

[22] Filed: **Sep. 15, 1989**

[51] **Int. Cl.**[5] **G06F 12/00**

[52] **U.S. Cl.** **395/600**; 364/DIG. 2; 364/974.2; 364/963.3; 364/283.2

[58] **Field of Search** 395/600

[56] **References Cited**

U.S. PATENT DOCUMENTS

4,635,189 1/1987 Kendall 364/200
4,805,099 2/1989 Huber 364/300
4,817,050 3/1989 Komatsu et al. 364/900
5,091,849 2/1992 Davis et al. 395/100

OTHER PUBLICATIONS

D. Comer "The Ubiquitous B-Tree" ACM Computing Surveys, vol. 11, No. 2, Jun. 1979.

Primary Examiner—Thomas C. Lee
Assistant Examiner—Peter Y. Wang
Attorney, Agent, or Firm—Harold C. McGurk, IV; Walter W. Nielsen; Raymond Warren

[57] **ABSTRACT**

Data is retrieved from a database, whose physical organization (indexed matrix) is similar to the logical organization (spread sheet) of the data, by requesting the parameters and the desired time interval. A data interface locates pages in the database containing the requested parameters. Entries from page indexes relating to desired parameters are consolidated into a master composite index. Pages relating to the time period requested are then bound and searched to find the desired data. This data is then returned to the requesting application.
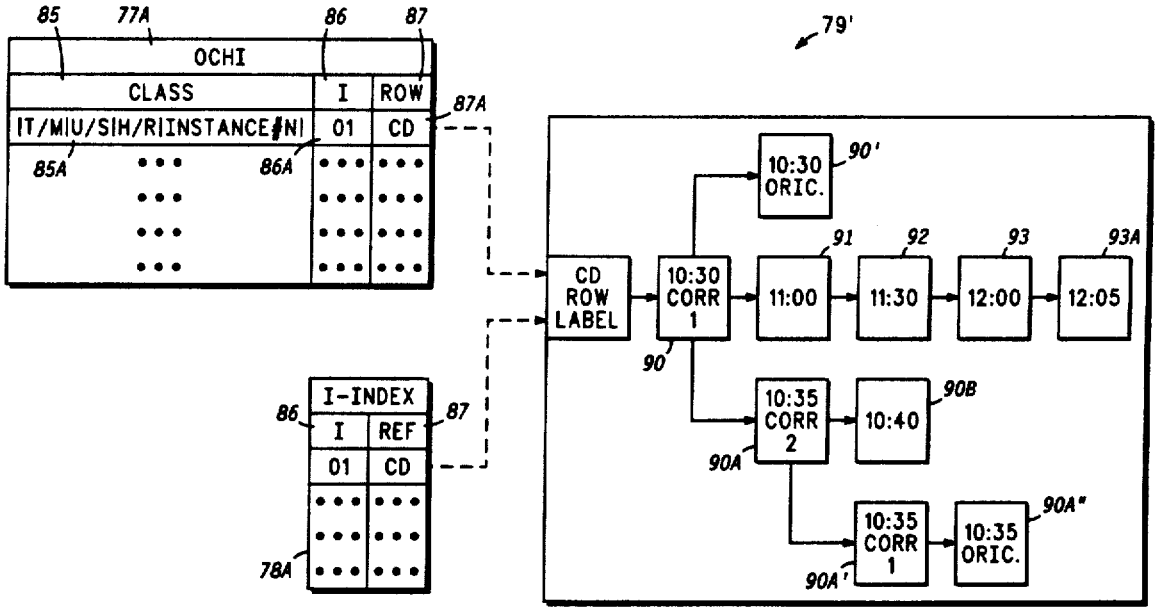
2 Claims, 19 Drawing Sheets