US009636761B2

(12) **United States Patent**
Harper et al.

(10) **Patent No.: US 9,636,761 B2**
(45) **Date of Patent: May 2, 2017**

(54) **MODULAR CUTTING SYSTEM, METHOD AND APPARATUS**

(71) Applicant: **Mactech, Inc.**, Red Wing, MN (US)

(72) Inventors: **Michael James Harper**, Red Wing, MN (US); **Joel Kent Wittenbraker**, Red Wing, MN (US)

(73) Assignee: **MACTECH, INC.**, Red Wing, MN (US)

(*) Notice: Subject to any disclaimer, the term of this patent is extended or adjusted under 35 U.S.C. 154(b) by 302 days.

(21) Appl. No.: **13/950,793**

(22) Filed: **Jul. 25, 2013**

(65) **Prior Publication Data**

US 2015/0027287 A1 Jan. 29, 2015

(51) **Int. Cl.**
B23D 57/00 (2006.01)

(52) **U.S. Cl.**
CPC ***B23D 57/0084*** (2013.01); ***B23D 57/0038*** (2013.01); *Y10T 29/49716* (2015.01); *Y10T 83/9292* (2015.04)

(58) **Field of Classification Search**
CPC .. B23D 57/00; B23D 57/0007; B23D 57/003; B23D 57/0038; B23D 57/0053; B23D 57/0061; B23D 57/0069; B23D 57/0084; Y10T 83/929; Y10T 83/9292; Y10T 29/49716
USPC 125/21
See application file for complete search history.

(56) **References Cited**

U.S. PATENT DOCUMENTS

482,103 A 9/1892 Speer
1,420,950 A 6/1922 Elder
3,055,694 A * 9/1962 Billner B66C 1/0281 294/65
3,835,901 A 9/1974 Jonsson
3,848,327 A * 11/1974 Gerber A41H 43/0292 269/21
4,168,729 A * 9/1979 Tausig A01G 23/089 144/34.5
4,532,689 A * 8/1985 Harder B23P 19/025 29/252
5,329,562 A 7/1994 Kubo et al.
5,361,748 A 11/1994 Matteucci
5,524,517 A 6/1996 Robinson
5,597,041 A 1/1997 Robinson
6,065,462 A 5/2000 Hodsden et al.
6,267,037 B1 7/2001 McCoy, Jr. et al.
6,279,564 B1 8/2001 Hodsden et al.
6,881,131 B2 4/2005 Parsells et al.
7,036,599 B2 5/2006 Matteucci
7,059,225 B1 * 6/2006 Rabell B23Q 9/0042 83/13
2007/0234869 A1 * 10/2007 Dale B27B 17/00 83/797
2007/0267006 A1 11/2007 Ogyu
(Continued)

Primary Examiner — Phong Nguyen
(74) *Attorney, Agent, or Firm* — Lempia Summerfield Katz LLC

(57) **ABSTRACT**

A system, a method and a modular apparatus may use a wire loop to cut an object. The apparatus may have a wire loop connected to pulleys on a deck attached to a frame. The deck may move relative to the frame to direct the wire loop through the object. The apparatus may have arms that may hold the object being cut. The apparatus may be configured with different cutting decks to reduce the overall size of the apparatus and/or to facilitate cutting a particular object in a particular environment.
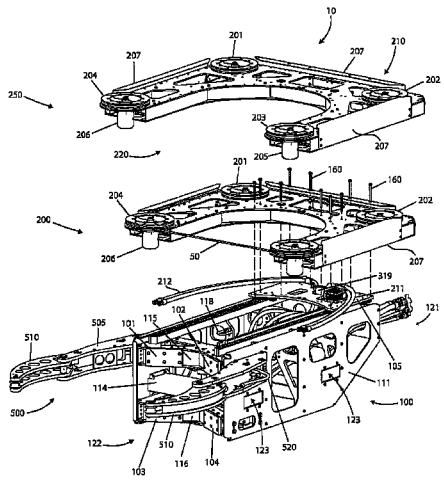
11 Claims, 9 Drawing Sheets