METHOD OF INTERMITTENTLY CASTING VARIABLY COLORED THERMOPLASTICS

Filed March 18, 1937 2 Sheets-Sheet 2

Fig. 3.

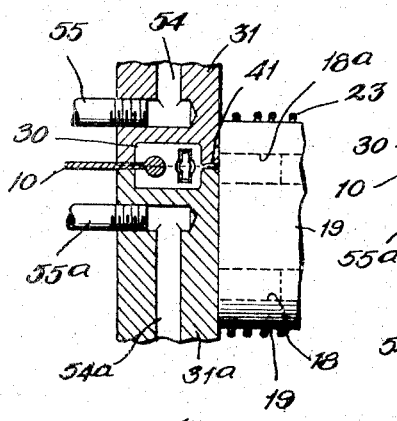

Fig. 4.

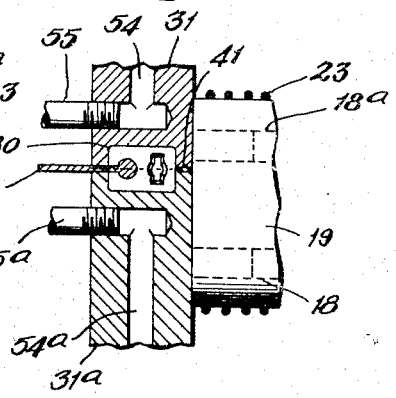

Fig. 5

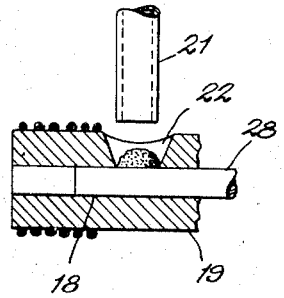

Fig. 6.

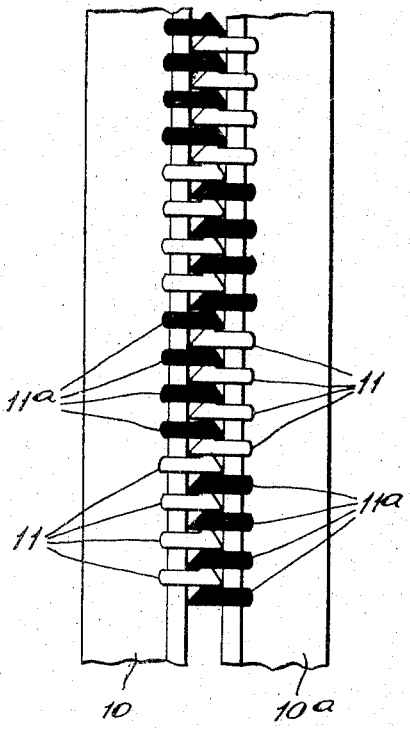

Fig. 7.

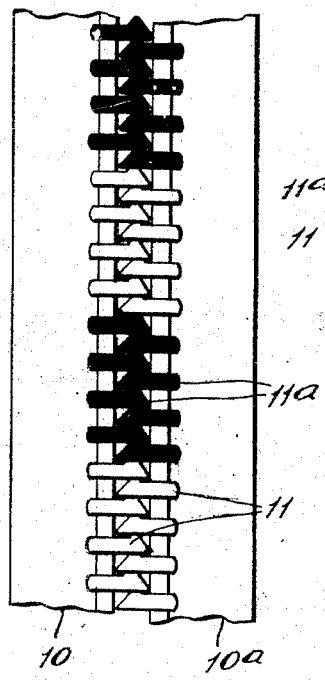

Fig. 8.

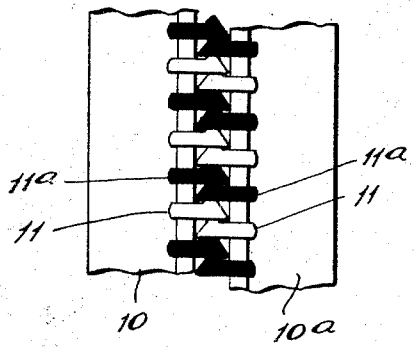

INVENTORS
LOUIS H. MORIN
DAVIS MARINSKY
BY Howard C. Thompson
ATTORNEY