Jan. 7, 1941. L. H. MORIN ET AL 2,227,461

METHOD OF INTERMITTENTLY CASTING VARIABLY COLORED THERMOPLASTICS

Filed March 18, 1937 2 Sheets-Sheet 1

Fig. 1.

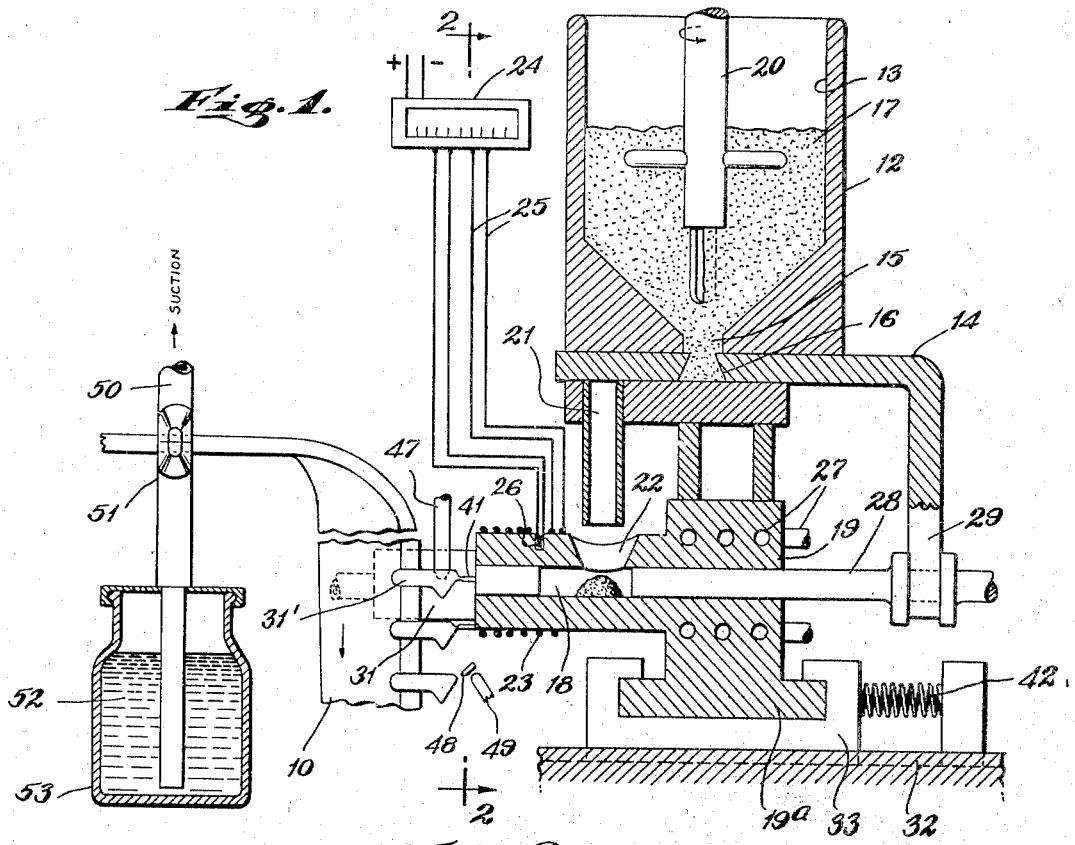

Fig. 2.

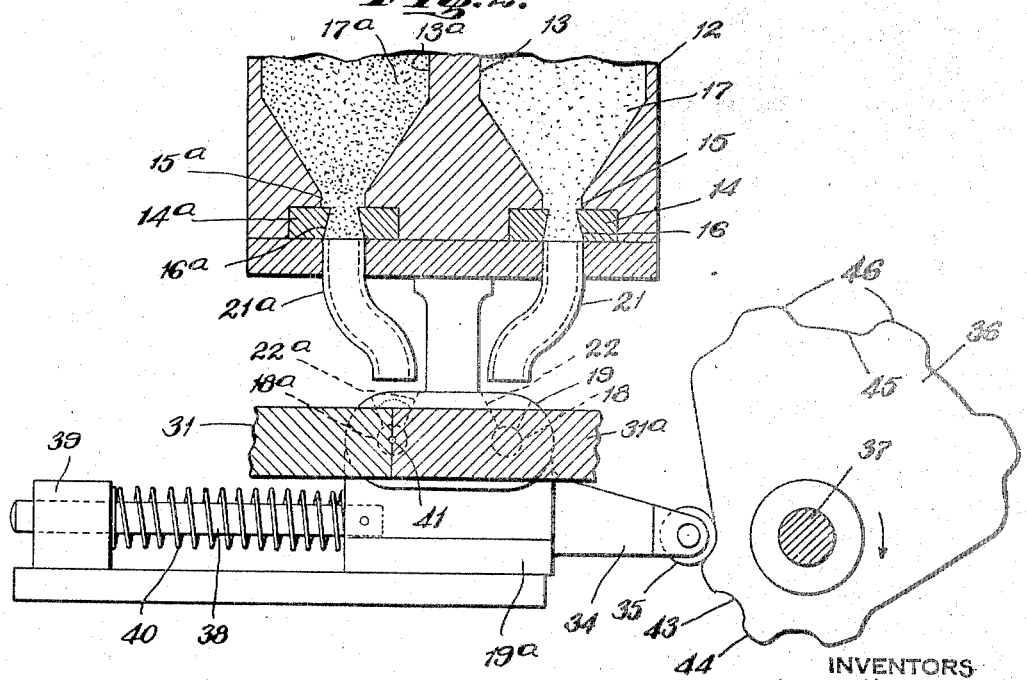

INVENTORS
LOUIS H. MORIN
DAVIS MARINSKY
BY Howard E. Thompson
ATTORNEY