Fig. 1

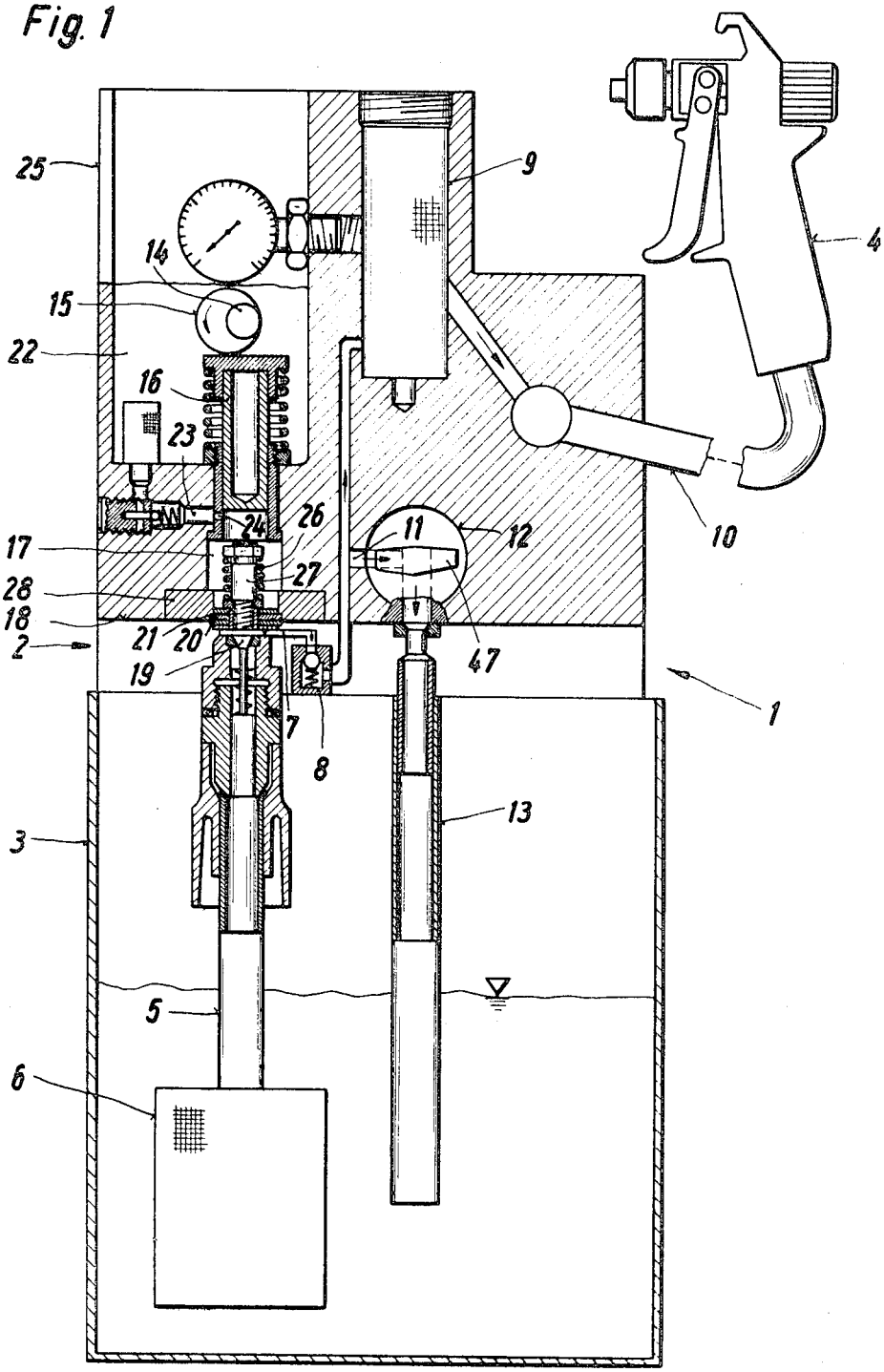

Inventor:
JOSEF WAGNER

ATTORNEY:
William Frederick Werner