US005915661A

United States Patent [19]

Silverman et al.

[11] **Patent Number: 5,915,661**

[45] **Date of Patent: Jun. 29, 1999**

[54] **COLLAPSIBLE DESK STAND FOR PORTABLE COMPUTER**

[75] Inventors: **Ira Silverman**, San Jose; **Stanislav Moiseyenko**, San Francisco, both of Calif.

[73] Assignee: **Fujitsu Limited**, Japan

[21] Appl. No.: **08/910,566**

[22] Filed: **Aug. 1, 1997**

[51] **Int. Cl.**[6] **F16M 11/00**

[52] **U.S. Cl.** **248/465.1**; 248/454; 248/456

[58] **Field of Search** 248/454, 456, 248/460, 461, 465.1, 153, 175, 918

[56] **References Cited**

U.S. PATENT DOCUMENTS

D. 317,910	7/1991	Hawkins et al.	D14/100
1,953,527	4/1934	Bentley .	
3,171,687	3/1965	Jensen	248/456 X
3,376,009	4/1968	Domino	248/456
4,467,727	8/1984	Strommer	248/456 X
4,474,352	10/1984	Nishi	248/456
4,618,119	10/1986	Powell	248/456
4,635,893	1/1987	Nelson	248/558
4,657,214	4/1987	Foster	248/176
4,717,112	1/1988	Pirkle	248/639
4,832,419	5/1989	Mitchell et al.	312/7.2
5,035,393	7/1991	Menaged	248/436
5,100,098	3/1992	Hawkins	248/917
5,141,196	8/1992	Arnold et al.	248/397
5,212,628	5/1993	Bradbury	361/395
5,283,714	2/1994	Tsai et al.	361/683
5,345,362	9/1994	Winkler	361/681
5,362,025	11/1994	Trom et al.	248/670
5,419,525	5/1995	Hilton	248/371
5,445,266	8/1995	Prete et al.	206/320
5,552,947	9/1996	Brown et al.	361/638
5,607,135	3/1997	Yamada	248/454 X

Primary Examiner—Ramon O. Ramirez
Attorney, Agent, or Firm—Skjerven, Morrill, MacPherson, Franklin & Friel LLP; Norman R. Klivans

[57] **ABSTRACT**

A collapsible desk stand for a portable computer allows variation in viewing angles of the computer display, and the ability to connect the portable computer to external, peripheral devices. The portable computer can be positioned on the stand to allow easier access to its keyboard (input tables) so that both right-handed and left-handed persons can position the portable computer so that data entry is most convenient. The stand is stable and includes a feature to allow it to be locked in its collapsed position. A fully adjustable handstrap assembly also for the portable computer is usable with the desk stand.
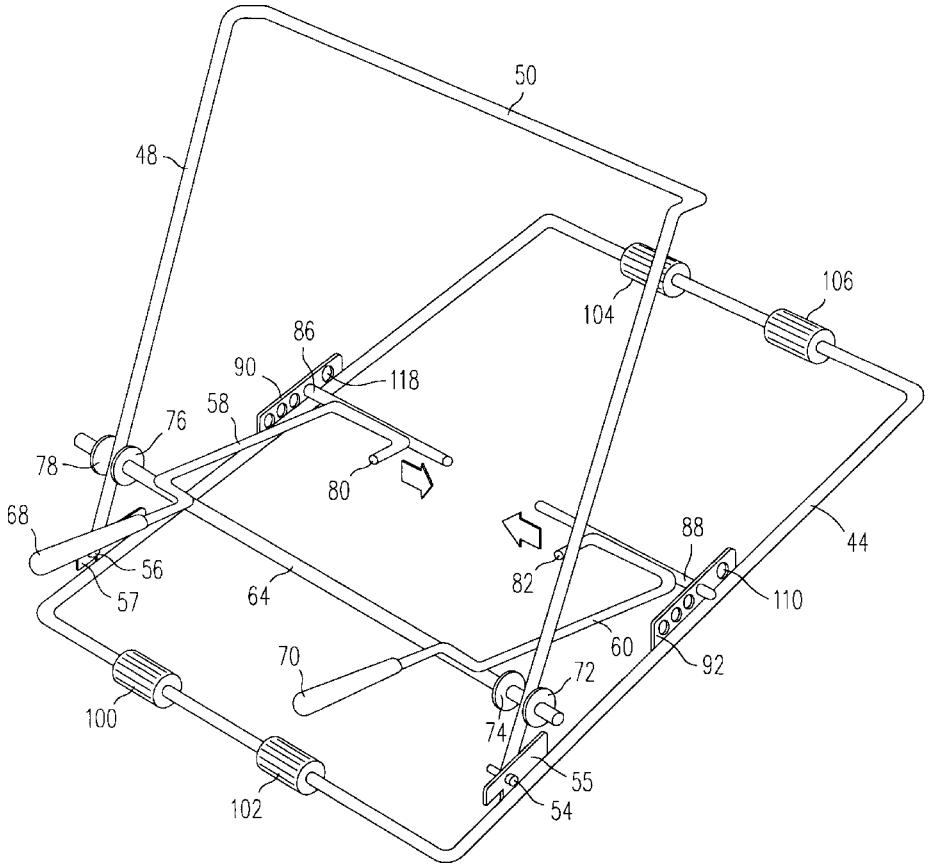
5 Claims, 6 Drawing Sheets