June 2, 1970 R. E. CASAS ET AL 3,515,461

CATADIOPTRIC OBJECTIVE OF THE CASSEGRAIN TYPE

Filed Jan. 30, 1967

Fig. 1.

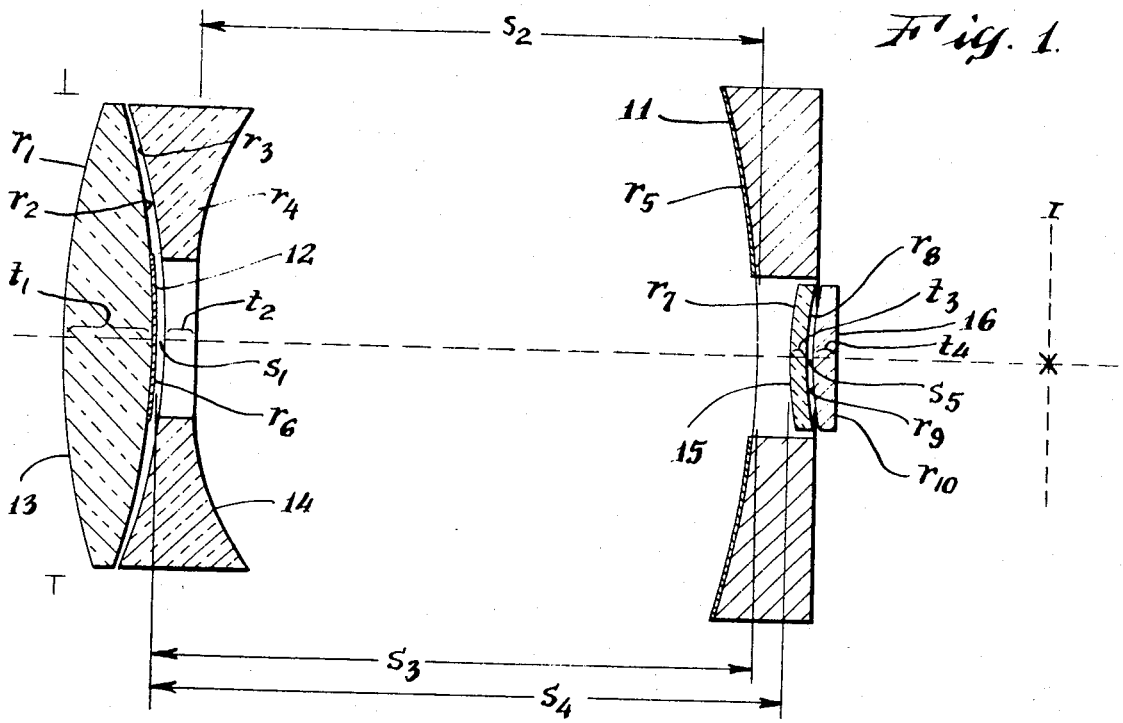

Fig. 2.

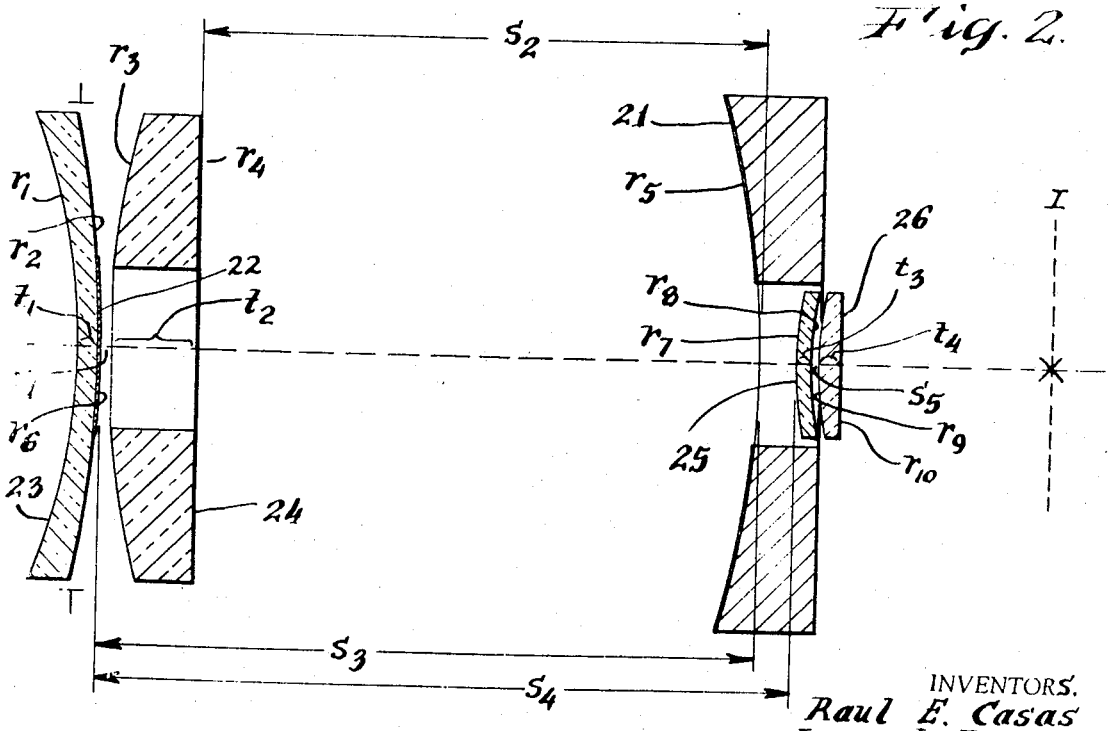

INVENTORS.
Raul E. Casas
BY Juan L. Rayces

Irving M. Kriegman
ATTORNEY.