US009411061B2

(12) **United States Patent**
Borgen

(10) **Patent No.: US 9,411,061 B2**
(45) **Date of Patent: Aug. 9, 2016**

(54) **METHOD FOR MANUFACTURING A STREAMER CABLE**

(71) Applicant: **WESTERNGECO L.L.C.**, Houston, TX (US)

(72) Inventor: **Lars Borgen**, Sande (NO)

(73) Assignee: **WESTERNGECO L.L.C.**, Houston, TX (US)

(*) Notice: Subject to any disclaimer, the term of this patent is extended or adjusted under 35 U.S.C. 154(b) by 42 days.

(21) Appl. No.: **14/045,507**

(22) Filed: **Oct. 3, 2013**

(65) **Prior Publication Data**

US 2014/0033500 A1 Feb. 6, 2014

Related U.S. Application Data

(62) Division of application No. 12/611,667, filed on Nov. 3, 2009, now Pat. No. 8,908,470.

(51) **Int. Cl.**

B21D 39/03	(2006.01)
B23P 11/00	(2006.01)
G01V 1/20	(2006.01)
G01V 13/00	(2006.01)

(52) **U.S. Cl.**

CPC ***G01V 1/201*** (2013.01); ***G01V 13/00*** (2013.01); *G01V 2001/204* (2013.01); *Y10T 29/49826* (2015.01)

(58) **Field of Classification Search**

CPC B29C 44/12; F16L 11/12; G01V 1/20; G01V 1/38; H01B 7/00; H01B 7/12; H01R 9/09; Y10T 29/49117; Y10T 29/49123; Y10T 29/49135

USPC 29/605, 606, 856, 858, 868; 174/47, 174/101.5; 181/108; 367/20, 21, 62, 154; 439/66, 74, 284

See application file for complete search history.

(56) **References Cited**

U.S. PATENT DOCUMENTS

4,937,794	A	6/1990	Marschall et al.	
4,998,227	A	3/1991	Rygg et al.	
5,274,603	A *	12/1993	Zibilich et al.	367/20
5,299,939	A	4/1994	Walker et al.	
5,867,451	A	2/1999	Chang et al.	
6,239,363	B1	5/2001	Wooters	
7,142,481	B1	11/2006	Metzbower et al.	
7,184,366	B1	2/2007	Harrick et al.	
7,188,406	B2 *	3/2007	Varkey et al.	29/825
7,545,703	B2 *	6/2009	Lunde et al.	367/20
7,548,486	B2 *	6/2009	Tenghamn	367/20
2006/0117874	A1	6/2006	Goujon et al.	
2011/0103180	A1	5/2011	Borgen	

FOREIGN PATENT DOCUMENTS

DE	4222269	1/1994

OTHER PUBLICATIONS

International Search Report of PCT Application No. PCT/US2010/053775 dated Jun. 30, 2011: pp. 1-3.

* cited by examiner

Primary Examiner — Paul D Kim
(74) *Attorney, Agent, or Firm* — Kevin B. McGoff

(57) **ABSTRACT**

A method for manufacturing a streamer cable includes connecting seismic devices using slacked wire and disposing a polymer body having a channel defined therein around the seismic devices and the wire such that the wire extends through the channel.
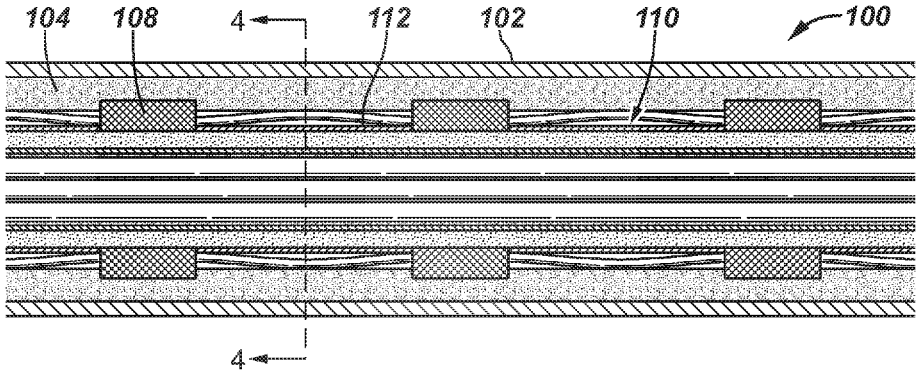
5 Claims, 4 Drawing Sheets