US009510961B2

(12) **United States Patent**
Kim

(10) **Patent No.: US 9,510,961 B2**
(45) **Date of Patent: Dec. 6, 2016**

(54) **POLYMERIC STENT AND METHODS OF MANUFACTURING THE SAME**

(71) Applicant: **Suntech Co., Ltd.**, Seoul (KR)

(72) Inventor: **Hyung-Il Kim**, Seoul (KR)

(73) Assignee: **Suntech Co., Ltd.**, Seoul (KR)

(*) Notice: Subject to any disclaimer, the term of this patent is extended or adjusted under 35 U.S.C. 154(b) by 9 days.

(21) Appl. No.: **14/626,584**

(22) Filed: **Feb. 19, 2015**

(65) **Prior Publication Data**

US 2015/0238335 A1 Aug. 27, 2015

(30) **Foreign Application Priority Data**

Feb. 26, 2014 (KR) 10-2014-0022859

(51) **Int. Cl.**

A61F 2/06	(2013.01)
B23K 26/00	(2014.01)
B29C 35/08	(2006.01)
A61F 2/91	(2013.01)
B23K 26/40	(2014.01)
A61F 2/82	(2013.01)
A61F 2/915	(2013.01)

(52) **U.S. Cl.**

CPC ***A61F 2/91*** (2013.01); ***B23K 26/402*** (2013.01); *A61F 2/82* (2013.01); *A61F 2002/91533* (2013.01); *A61F 2002/91575* (2013.01); *A61F 2240/001* (2013.01); *B23K 2203/42* (2015.10); *B29C 35/08* (2013.01); *B29C 2035/0838* (2013.01)

(58) **Field of Classification Search**

CPC B29C 2035/0838
USPC 256/400
See application file for complete search history.

(56) **References Cited**

U.S. PATENT DOCUMENTS

5,508,378	A *	4/1996	Ohara et al.	528/354
2002/0065553	A1*	5/2002	Weber	623/1.46
2002/0108937	A1*	8/2002	Shapovalov et al.	219/121.72
2004/0220660	A1*	11/2004	Shanley et al.	623/1.16
2007/0156230	A1*	7/2007	Dugan et al.	623/1.16
2008/0275537	A1	11/2008	Limon	
2009/0319031	A1	12/2009	Wang et al.	
2011/0307050	A1*	12/2011	Harrington	A61F 2/91 623/1.16

FOREIGN PATENT DOCUMENTS

WO 2007/142736 A2 12/2007

OTHER PUBLICATIONS

Park, Seung-Bae, "Notice of Grounds of Rejection (Korean Office Action)," dispatched Jun. 27, 2014 for corresponding Korean Application No. 10-2014-0022859 filed Feb. 26, 2014.
Extended European Search Report dated Aug. 9, 2015 from European Patent Application No. 15156735.1, pp. 1-5.

* cited by examiner

Primary Examiner — Jacqueline Woznicki
(74) *Attorney, Agent, or Firm* — MH2 Technology Law Group, LLP

(57) **ABSTRACT**

Methods of manufacturing polymeric stents by forming a pattern on a polylactic acid tube using a second harmonic generator laser and polylactic acid polymeric stents having a pattern formed using a second harmonic generator laser.
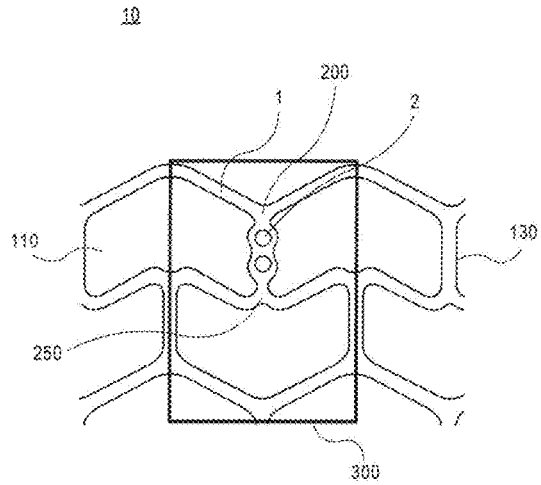
11 Claims, 5 Drawing Sheets