US009410861B2

(12) **United States Patent**
Wade

(10) **Patent No.: US 9,410,861 B2**
(45) **Date of Patent: Aug. 9, 2016**

(54) **PRESSURE SENSOR WITH OVERPRESSURE PROTECTION**

(71) Applicant: **Honeywell International Inc.**, Morristown, NJ (US)

(72) Inventor: **Richard Wade**, Worthington, OH (US)

(73) Assignee: **Honeywell International Inc.**, Morris Plains, NJ (US)

(*) Notice: Subject to any disclaimer, the term of this patent is extended or adjusted under 35 U.S.C. 154(b) by 106 days.

(21) Appl. No.: **14/225,059**

(22) Filed: **Mar. 25, 2014**

(65) **Prior Publication Data**

US 2015/0276526 A1 Oct. 1, 2015

(51) **Int. Cl.**

G01L 13/02	(2006.01)
G01L 7/08	(2006.01)
G01L 9/00	(2006.01)
G01L 19/06	(2006.01)

(52) **U.S. Cl.**

CPC ***G01L 7/08*** (2013.01); ***G01L 9/0045*** (2013.01); ***G01L 9/0051*** (2013.01); ***G01L 13/025*** (2013.01); ***G01L 19/0618*** (2013.01)

(58) **Field of Classification Search**

CPC G01L 7/08; G01L 13/025; G01L 7/00; G01B 7/18

USPC 73/716, 715, 763, 700

See application file for complete search history.

(56) **References Cited**

U.S. PATENT DOCUMENTS

4,102,210	A *	7/1978	Couston	G01L 9/0051 338/4
4,592,238	A *	6/1986	Busta	G01L 9/0042 29/621.1
4,852,408	A	8/1989	Sanders et al.	
4,905,575	A	3/1990	Knecht et al.	
5,062,302	A	11/1991	Petersen et al.	
5,157,973	A *	10/1992	Ciminelli	G01L 9/0073 361/283.4
5,234,571	A	8/1993	Noeker	
5,333,504	A *	8/1994	Lutz	G01L 19/0618 338/4
5,357,808	A	10/1994	Fung et al.	
5,381,299	A *	1/1995	Provenzano	G01L 9/0073 29/25.42
6,030,854	A	2/2000	Mashimoto et al.	
6,330,829	B1	12/2001	Kurtz et al.	
7,360,431	B2	4/2008	Yoneda et al.	
7,503,221	B2 *	3/2009	Wade	G01L 9/0051 73/721

(Continued)

FOREIGN PATENT DOCUMENTS

JP	20022340718	11/2002
WO	9405986	3/1994

(Continued)

OTHER PUBLICATIONS

European Search Report for Corresponding EP Application No. 1558319.2-1557, dated Aug. 20, 2015.

Primary Examiner — Lisa Caputo
Assistant Examiner — Nigel Plumb
(74) *Attorney, Agent, or Firm* — Conley Rose, P.C.; Kristin Jordan Harkins

(57) **ABSTRACT**

A pressure sensor may include an input for receiving an input pressure and a sense die having a sense diaphragm that is exposed to the input pressure and is configured to deflect in response to the input pressure. A diaphragm stop may be positioned adjacent to a first side of the sense diaphragm to limit deflection of the sense diaphragm towards the diaphragm stop. The diaphragm stop include a plurality of defined projections to help prevent stiction.
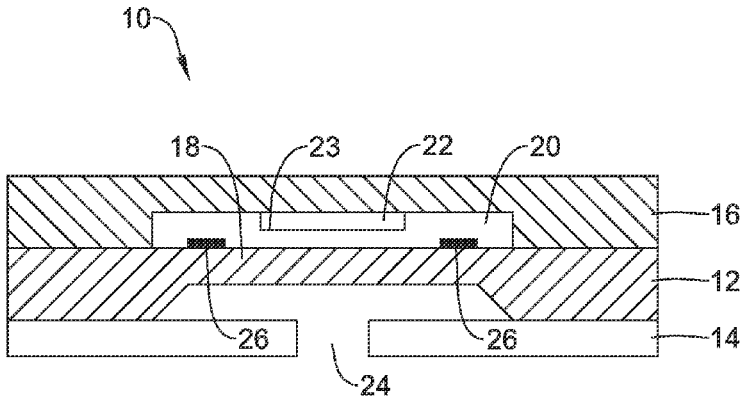
20 Claims, 9 Drawing Sheets