US009409361B2

(12) **United States Patent**
Sana et al.

(10) **Patent No.: US 9,409,361 B2**
(45) **Date of Patent: Aug. 9, 2016**

(54) **MOLD, MOLDING JIG AND MOLDING METHOD**

(75) Inventors: **Toshikazu Sana**, Kakamigahara (JP); **Akihito Sakai**, Gifu (JP); **Akira Murai**, Minokamo (JP); **Yasuhiro Takenaka**, Anpachi-gun (JP); **Kazuyoshi Kawano**, Hashima-gun (JP); **Tomoya Takahashi**, Ibi-gun (JP)

(73) Assignee: **KAWASAKI JUKOGYO KABUSHIKI KAISHA**, Hyogo (JP)

(*) Notice: Subject to any disclaimer, the term of this patent is extended or adjusted under 35 U.S.C. 154(b) by 355 days.

(21) Appl. No.: **13/976,732**

(22) PCT Filed: **Dec. 26, 2011**

(86) PCT No.: **PCT/JP2011/007255**

§ 371 (c)(1),
(2), (4) Date: **Sep. 24, 2013**

(87) PCT Pub. No.: **WO2012/090468**

PCT Pub. Date: **Jul. 5, 2012**

(65) **Prior Publication Data**

US 2014/0008009 A1 Jan. 9, 2014

(30) **Foreign Application Priority Data**

Dec. 27, 2010 (JP) 2010-290401

(51) **Int. Cl.**

B29C 43/36	(2006.01)
B29C 70/32	(2006.01)
B29D 99/00	(2010.01)
B29C 33/00	(2006.01)
B29C 70/54	(2006.01)
B64F 5/00	(2006.01)

(52) **U.S. Cl.**

CPC ***B29D 99/001*** (2013.01); ***B29C 33/0011*** (2013.01); ***B29C 43/3642*** (2013.01); ***B29C 70/32*** (2013.01); ***B29C 70/543*** (2013.01); *B29C 2043/3652* (2013.01); *B29C 2043/3655* (2013.01); *B64F 5/0009* (2013.01); *Y02T 50/433* (2013.01); *Y10T 156/103* (2015.01)

(58) **Field of Classification Search**

CPC B29C 70/543; B29C 33/0011; B29C 2043/3652; B29C 2043/3655

See application file for complete search history.

(56) **References Cited**

U.S. PATENT DOCUMENTS

6,298,896	B1 *	10/2001	Sherrill et al.	156/581
8,057,206	B1 *	11/2011	McKnight	B29C 33/0011 249/161
8,980,039	B2 *	3/2015	Boyeldieu	B29C 33/0011 156/245
2008/0230652	A1	9/2008	Biornstad et al.	

(Continued)

FOREIGN PATENT DOCUMENTS

FR	WO 2009095619	A2 *	8/2009	B29C 33/0011
JP	2-162016	A	6/1990	

(Continued)

Primary Examiner — William Bell

(74) *Attorney, Agent, or Firm* — Sughrue Mion, PLLC

(57) **ABSTRACT**

A mold (**10**) according to the present invention is a mold for molding a surface of a laminate (**60**) when curing the laminate (**60**) obtained by laminating prepreg (**62**). The mold (**10**) has a planar plate shape and elastically deforms from the planar plate shape into a shape corresponding to a shape of the laminate (**60**), thereby being capable of coming tight into contact with the laminate (**60**). Thereby, a mold which is easy to handle can be provided.
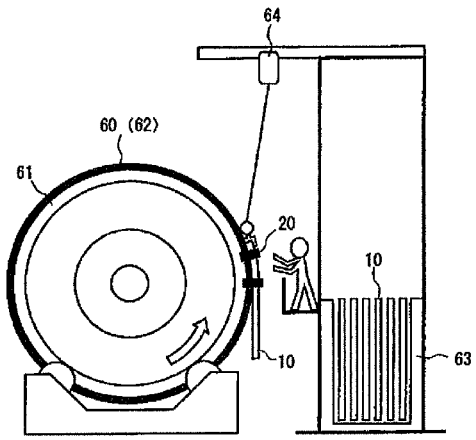
7 Claims, 5 Drawing Sheets