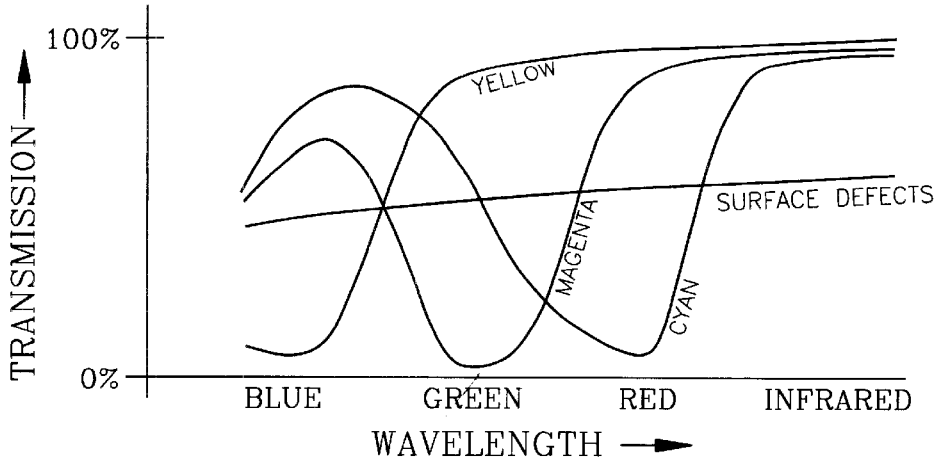

FIG. 1
PRIOR ART

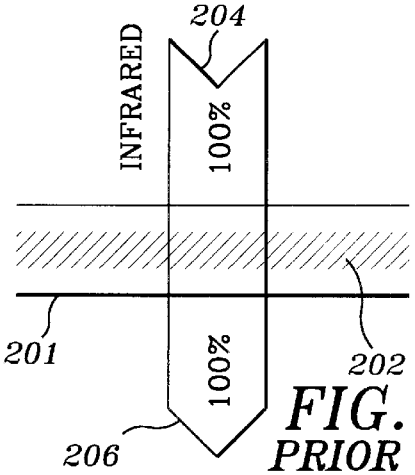

FIG. 2a
PRIOR ART

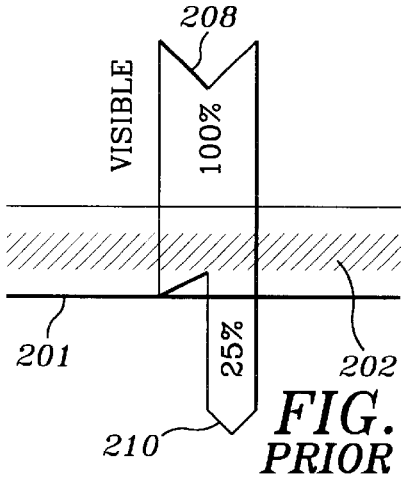

FIG. 2b
PRIOR ART

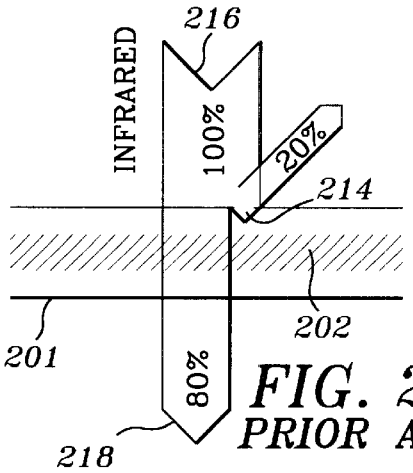

FIG. 2c
PRIOR ART

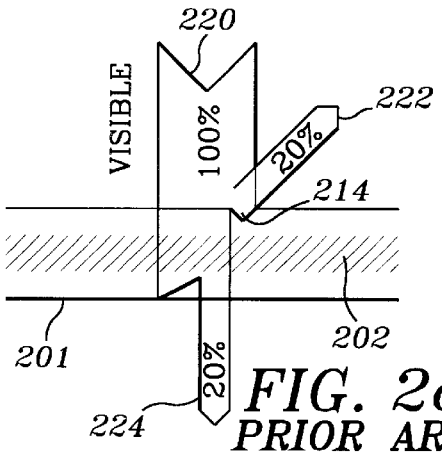

FIG. 2d
PRIOR ART