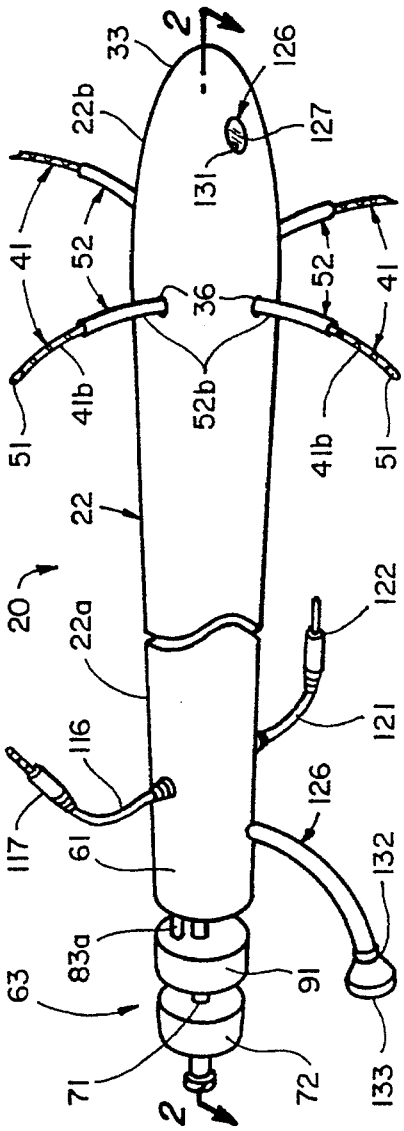

FIG_1

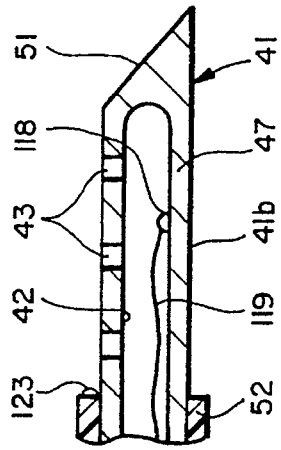

FIG_4

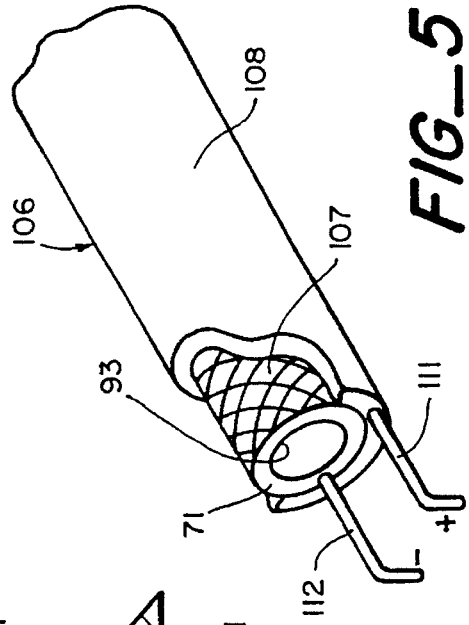

FIG_5

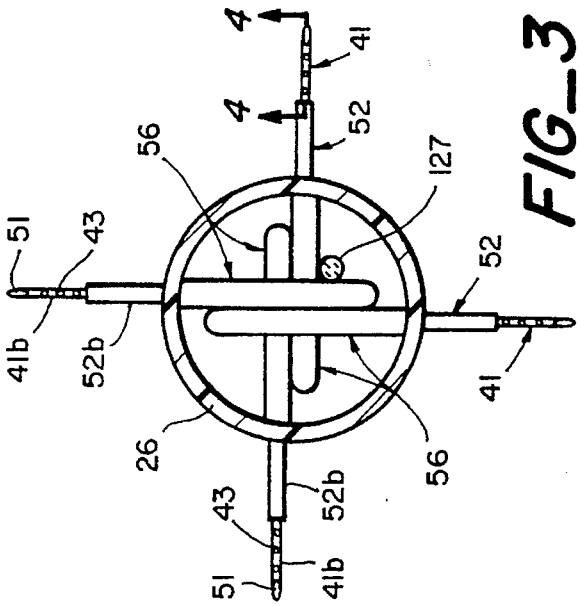

FIG_3