US005684560A

United States Patent [19]

Roffman et al.

[11] **Patent Number: 5,684,560**

[45] **Date of Patent: Nov. 4, 1997**

[54] **CONCENTRIC RING SINGLE VISION LENS DESIGNS**

[75] Inventors: **Jeffrey H. Roffman; Edgar V. Menezes**, both of Jacksonville, Fla.

[73] Assignee: **Johnson & Johnson Vision Products, Inc.**, Jacksonville, Fla.

[21] Appl. No.: **433,842**

[22] Filed: **May 4, 1995**

[51] **Int. Cl.**[6] **G02C 7/04**; G02C 7/02; A61F 2/16

[52] **U.S. Cl.** ..... **351/160 R**; 351/160 H; 351/176; 623/6

[58] **Field of Search** ..... 351/160 R, 160 H, 351/161, 176, 177; 623/6

[56] **References Cited**

U.S. PATENT DOCUMENTS

4,564,484	1/1986	Neefe	264/2.6
4,580,882	4/1986	Nuchmann	351/161
4,890,912	1/1990	Visser	351/161
5,050,981	9/1991	Roffman	351/177
5,152,787	10/1992	Hamblen	623/6
5,181,053	1/1993	Brown	351/161
5,217,489	6/1993	Van Noy et al.	623/6
5,220,359	6/1993	Roffman	351/177
5,225,858	7/1993	Portney	351/161

FOREIGN PATENT DOCUMENTS

WO 92/17134 10/1992 WIPO .

Primary Examiner—Georgia Y. Epps
Assistant Examiner—Jordan M. Schwartz

[57] **ABSTRACT**

Concentric ring, single vision lens designs are disclosed which improve the depth-of-focus of the lens relative to current spherical contact lenses or intraocular lenses by placing at least one additional peripheral optical radius on the front or back surface of the lens. A plurality of concentric annular rings are provided in the periphery of the optic zone of the lens. The arrangement of optic powers in the concentric annular rings includes a mixture of the basic spherical refractive power and other annular rings with less plus or greater minus spherical refractive power, arranged to mediate spherical aberrations and improve visual acuity. The concentric annular ring design corrects peripheral, aperture-dependent ocular aberrations in a discrete, zonal fashion.
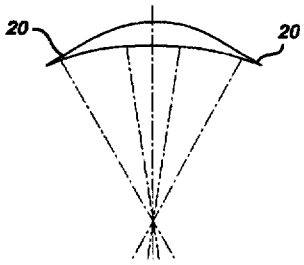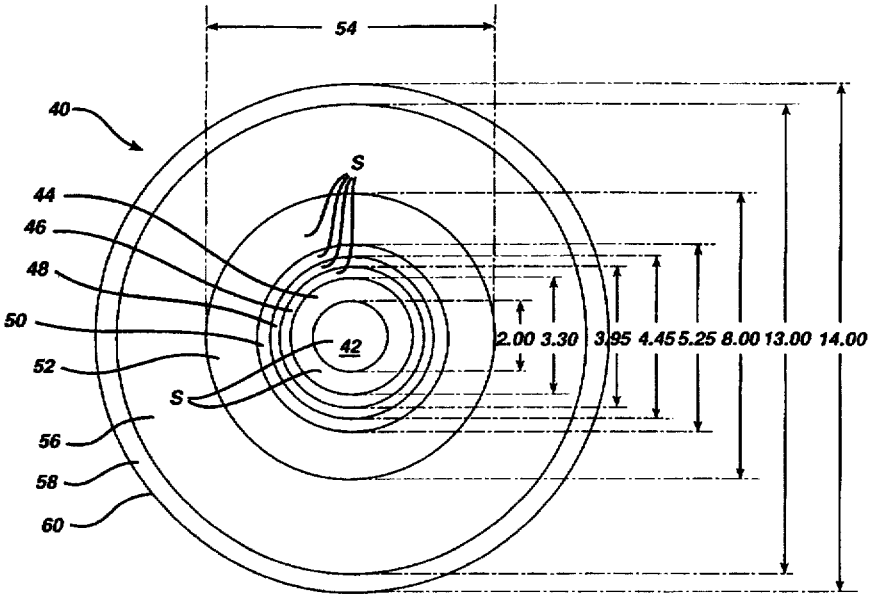
14 Claims, 3 Drawing Sheets