# United States Patent [19]

**Maser**

[11] **Patent Number: 4,683,360**

[45] **Date of Patent: Jul. 28, 1987**


[54] **MEMBRANE SWITCH COMBINED WITH ELECTROLUMINESCENT LAMP PANEL**


[75] Inventor: **Thomas L. Maser**, Mequon, Wis.

[73] Assignee: **W. H. Brady Co.**, Milwaukee, Wis.



[21] Appl. No.: **861,485**

[22] Filed: **May 9, 1986**

[51] **Int. Cl.**[4] ..... **H01H 9/16**

[52] **U.S. Cl.** ..... **200/314**; 200/317; 200/5 A; 200/159 B

[58] **Field of Search** ..... 200/317, 314, 313, 5 A, 200/310, 308, 159 B



[56] **References Cited**

U.S. PATENT DOCUMENTS

| | | | |
|---|---|---|---|
| 4,060,703 | 11/1977 | Everett, Jr. | 200/5 A |
| 4,075,449 | 2/1978 | Yagi et al. | 200/315 |
| 4,320,268 | 3/1982 | Brown | 200/5 A |
| 4,532,395 | 7/1985 | Zukowski | 200/314 |

FOREIGN PATENT DOCUMENTS

| | | | |
|---|---|---|---|
| 0017580 | 10/1980 | European Pat. Off. | 200/314 |
| 2833304 | 2/1979 | Fed. Rep. of Germany | 200/314 |
| 3517551 | 12/1985 | Fed. Rep. of Germany | 200/310 |

OTHER PUBLICATIONS

I.B.M., Technical Disclosure Bulletin, vol. 13, No. 3, 8/1970.



*Primary Examiner*—Stephen Marcus
*Assistant Examiner*—Ernest G. Cusick
*Attorney, Agent, or Firm*—Quarles & Brady



[57] **ABSTRACT**

An assembly combining a membrane switch and an electroluminescent lamp panel in which the lamp panel is attached to a circuit layer of the membrane switch.

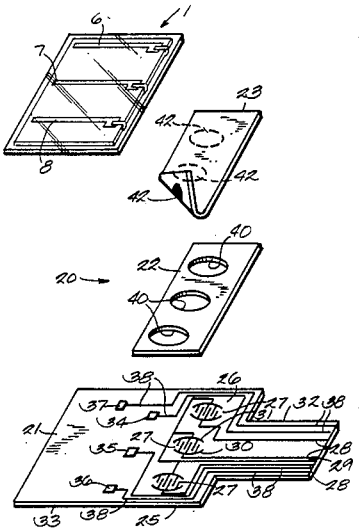
**5 Claims, 8 Drawing Figures**