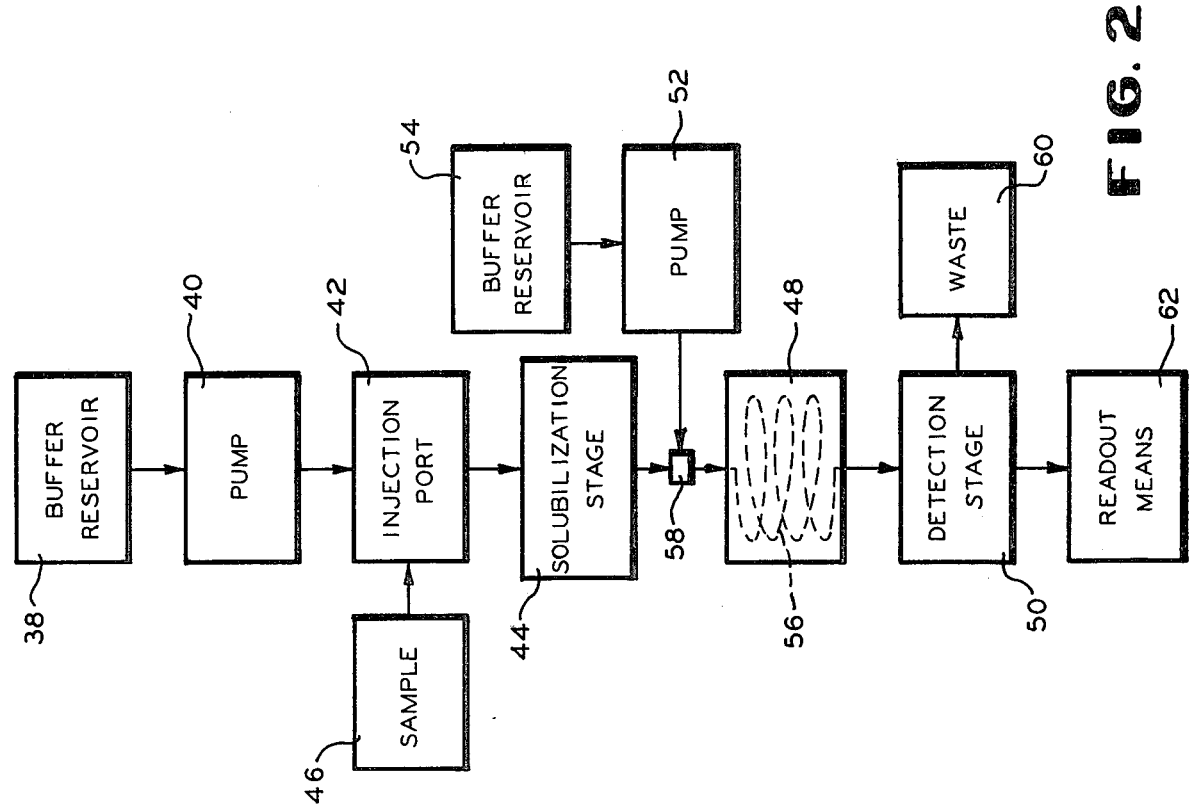
BUFFER RESERVOIR
38
PUMP
40
INJECTION PORT
42
SAMPLE
46
SOLUBILIZATION STAGE
44
BUFFER RESERVOIR
54
PUMP
52
58
48
56
DETECTION STAGE
50
WASTE
60
READOUT MEANS
62

FIG. 2

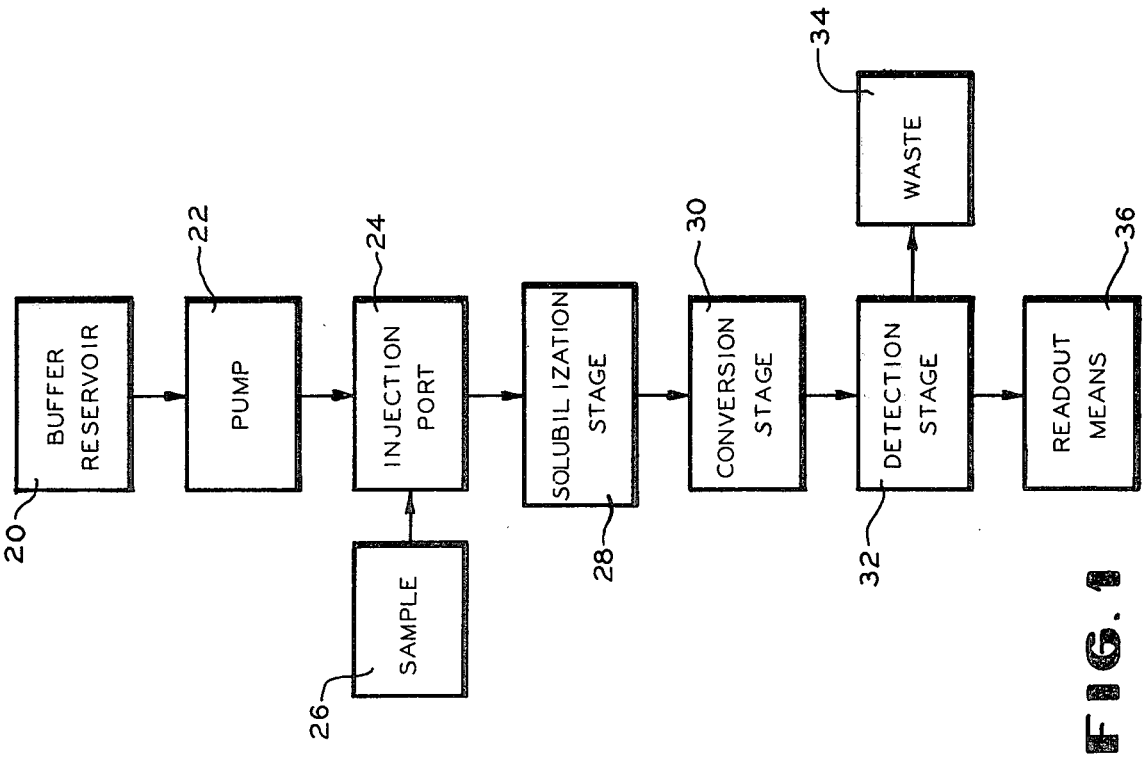
BUFFER RESERVOIR
20
PUMP
22
INJECTION PORT
24
SAMPLE
26
SOLUBILIZATION STAGE
28
CONVERSION STAGE
30
DETECTION STAGE
32
WASTE
34
READOUT MEANS
36

FIG. 1