Nov. 6, 1923. 1,473,360

H. H. STYLL

LENS

Filed April 29, 1921

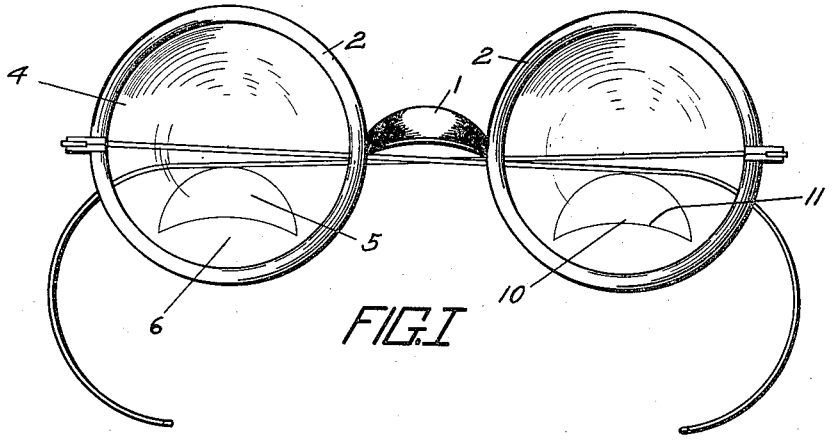

FIG. I

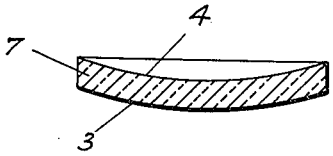

FIG. II

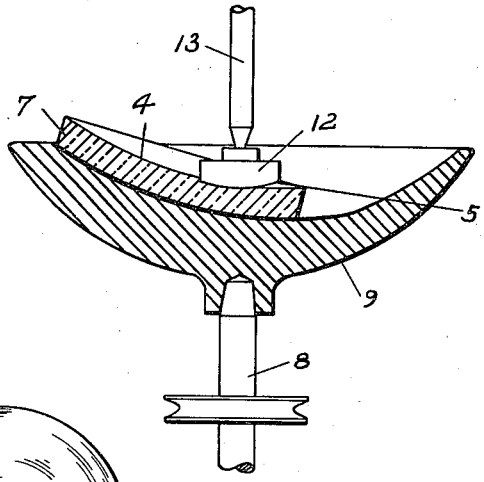

FIG. III

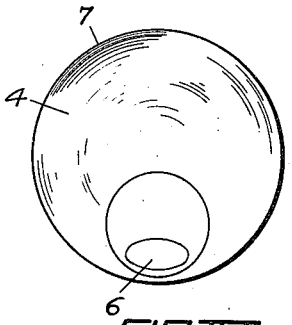

FIG. IV

INVENTOR
HARRY H STYLL
BY
H. H. Styll & H. K. Parsons
ATTORNEYS