March 2, 1965 W. M. WALTON 3,171,360

PULSATION TYPE PUMPS

Filed March 9, 1962 3 Sheets-Sheet 1

Fig. 1

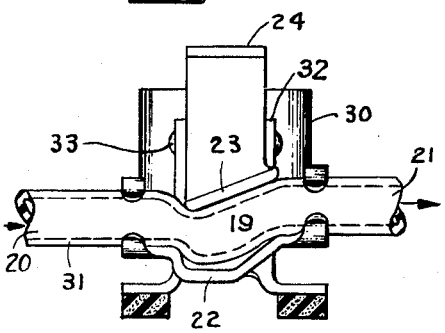

Fig. 2

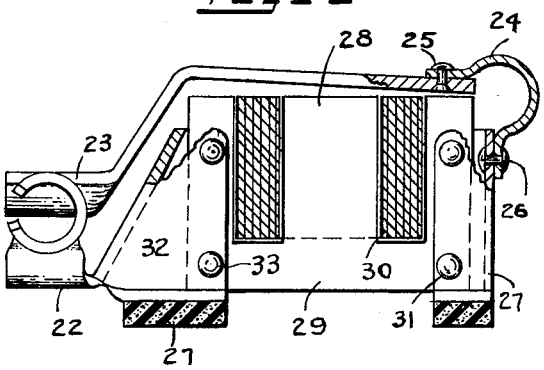

Fig. 3

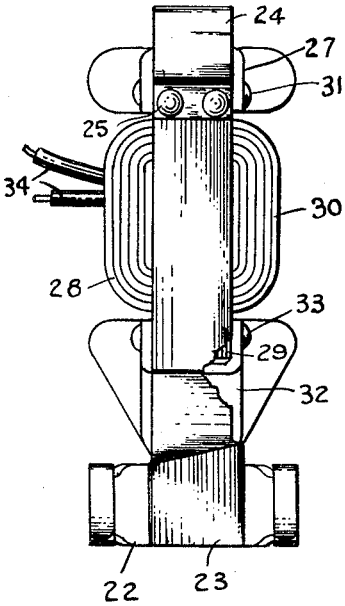

Fig. 4

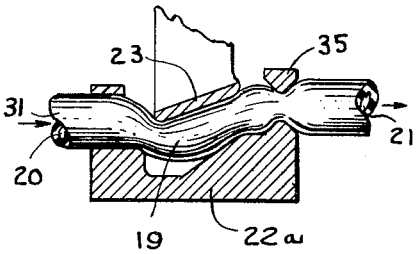

INVENTOR

William Melin Walton

BY

Frederick F. Winterscorn

ATTORNEY