United States Patent [19]

Giner et al.

[11] **Patent Number: 4,469,760**

[45] **Date of Patent: Sep. 4, 1984**

[54] **REDOX BATTERY INCLUDING A BROMINE POSITIVE ELECTRODE AND A CHROMIUM ION NEGATIVE ELECTRODE, AND METHOD**

[75] Inventors: **Jose D. Giner**, Brookline; **Herbert H. Stark**, Waltham, both of Mass.

[73] Assignee: **Electric Power Research, Institute**, Palo Alto, Calif.

[21] Appl. No.: **300,576**

[22] Filed: **Sep. 8, 1981**

[51] **Int. Cl.**[3] **H01M 8/20**

[52] **U.S. Cl.** **429/21**; 429/105; 429/199; 429/202; 429/15

[58] **Field of Search** 429/15, 21, 29, 101, 429/105, 199, 218, 202

[56] **References Cited**

U.S. PATENT DOCUMENTS

4,105,829	8/1978	Venero	429/15
4,159,366	6/1979	Thaller	429/15
4,162,351	7/1979	Putt et al.	429/15
4,206,269	6/1980	Putt et al.	429/15
4,362,791	12/1982	Kaneko et al.	429/101

Primary Examiner—Anthony Skapars

Attorney, Agent, or Firm—Flehr, Hohbach, Test, Albritton & Herbert

[57] **ABSTRACT**

A redox flow battery with a positive half-cell compartment containing bromide ion, bromine and a complexing organic liquid for bromine, and a negative electrode half-cell compartment containing chromium ion, and including electrolyte fluid communication therebetween.
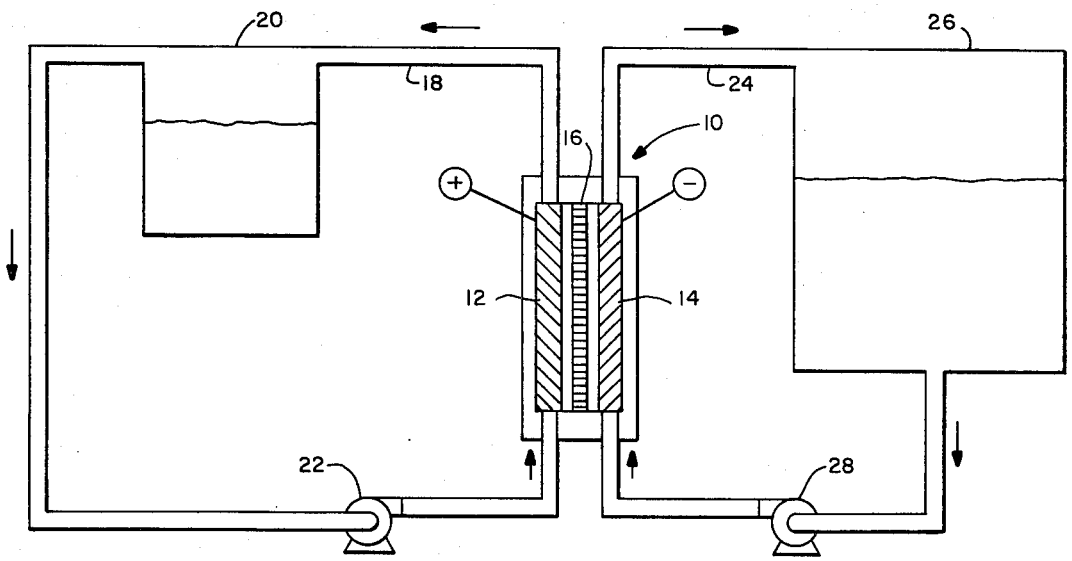
6 Claims, 1 Drawing Figure