US008968660B2

(12) **United States Patent**
Davis et al.

(10) **Patent No.: US 8,968,660 B2**
(45) **Date of Patent: Mar. 3, 2015**

(54) **CHEMICAL ANALYZER**

(75) Inventors: **Stephen Charles Davis**, Ascot (AU); **John David Petty**, Holland Park West (AU); **John Thomas Huberts**, Sunnybank Hills (AU)

(73) Assignee: **Aqualysis Pty Ltd**, Ascot (AU)

(*) Notice: Subject to any disclaimer, the term of this patent is extended or adjusted under 35 U.S.C. 154(b) by 246 days.

(21) Appl. No.: **13/211,943**

(22) Filed: **Aug. 17, 2011**

(65) **Prior Publication Data**

US 2012/0003124 A1 Jan. 5, 2012

Related U.S. Application Data

(62) Division of application No. 12/514,610, filed as application No. PCT/AU2007/001801 on Nov. 23, 2007, now abandoned.

(30) **Foreign Application Priority Data**

Nov. 24, 2006 (AU) 2006906573

(51) **Int. Cl.**

G01N 21/01	(2006.01)
G01N 21/75	(2006.01)
G01N 31/16	(2006.01)
G01N 35/10	(2006.01)

(Continued)

(52) **U.S. Cl.**

CPC ***G01N 31/16*** (2013.01); ***G01N 21/01*** (2013.01); ***G01N 21/75*** (2013.01); *G01N 2021/8411* (2013.01); ***G01N 35/1002*** (2013.01); *G01N 2021/0193* (2013.01); *G01N 2035/1058* (2013.01); ***G01N 21/79*** (2013.01)

USPC **422/81**; 422/68.1; 422/82.09; 436/165

(58) **Field of Classification Search**

CPC G01N 35/1002; G01N 2035/1058; G01N 21/75; G01N 2021/0193; G01N 2021/752

USPC 436/165

See application file for complete search history.

(56) **References Cited**

U.S. PATENT DOCUMENTS

3,469,578	A	9/1969	Bierman	
4,318,400	A	3/1982	Peery et al.	
4,479,989	A *	10/1984	Mahal	428/35.5

(Continued)

FOREIGN PATENT DOCUMENTS

EP	0229982	B	7/1987

Primary Examiner — Yelena G Gakh
Assistant Examiner — Michelle Adams
(74) *Attorney, Agent, or Firm* — Novak Druce Connolly Bove + Quigg LLP

(57) **ABSTRACT**

A chemical analyzer analyzes a sample for a target chemical. The sample and reagent are added to a measurement cell until a detectable change is observed. A reference compound, which does not take part in the reaction between the target chemical and reagent, is added to the reagent. By measuring the concentration of the reference compound, the amount of reagent used may be determined. In one embodiment, a mechanism introduces the sample, adds reagent, mixes, cleans, and flushes the measurement cell, which incorporates a longitudinal chamber having inlets for the sample and reagent and an outlet for measured sample/reagent mixtures. A detector located in or adjacent to the chamber between the inlets and outlet and a piston movable in the chamber carries seals such that movement of a piston sequentially opens the inlets and expels the fluid. The analyzer also includes a device that delivers reagent to a measurement cell.
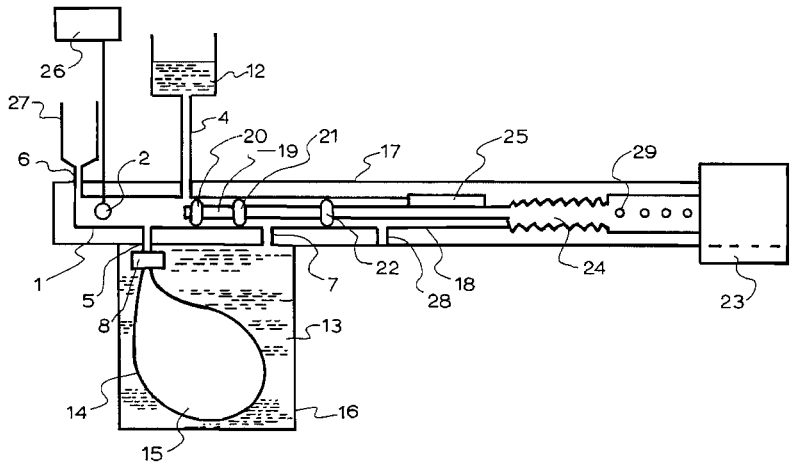
17 Claims, 7 Drawing Sheets