Jan. 12, 1965 J. A. ZANG ETAL 3,165,460

ELECTROLYTIC ACID GENERATOR

Filed April 11, 1962 2 Sheets-Sheet 1

FIG.1

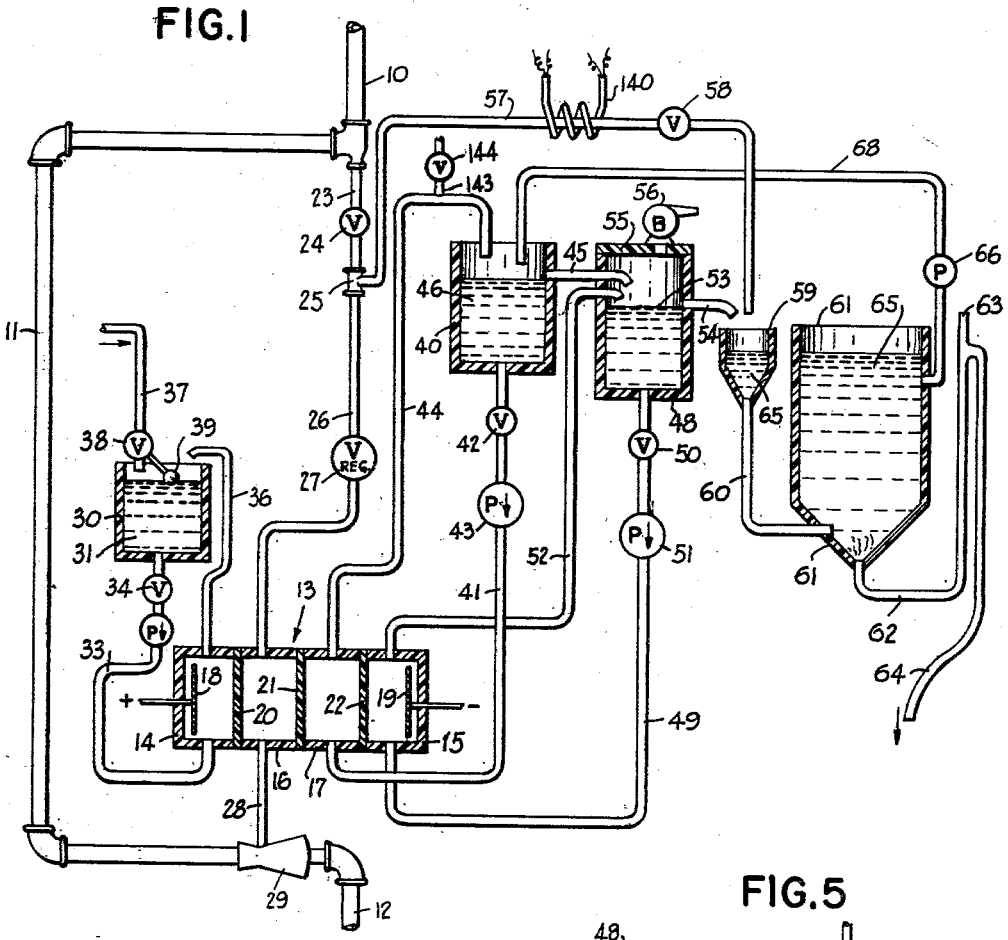

FIG.4

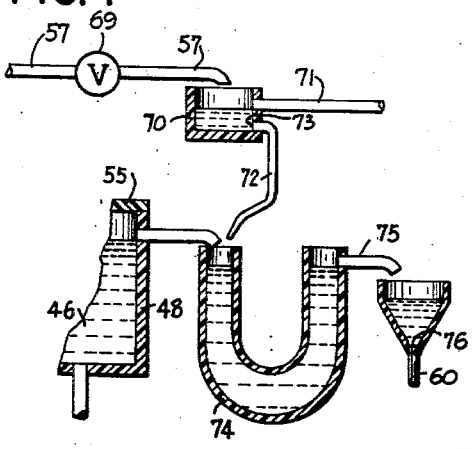

FIG.5

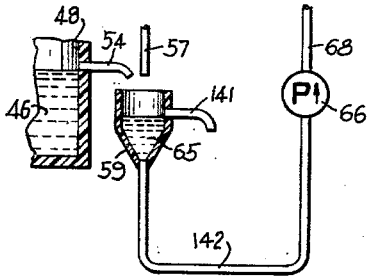

INVENTORS
JOSEPH A. ZANG
ERWIN M. COHEN

BY

ATTORNEY