CONTINUOUSLY VARIABLE PERMANENT MAGNET FOR IMAGING PURPOSES

Filed Oct. 7, 1960 2 Sheets-Sheet 1

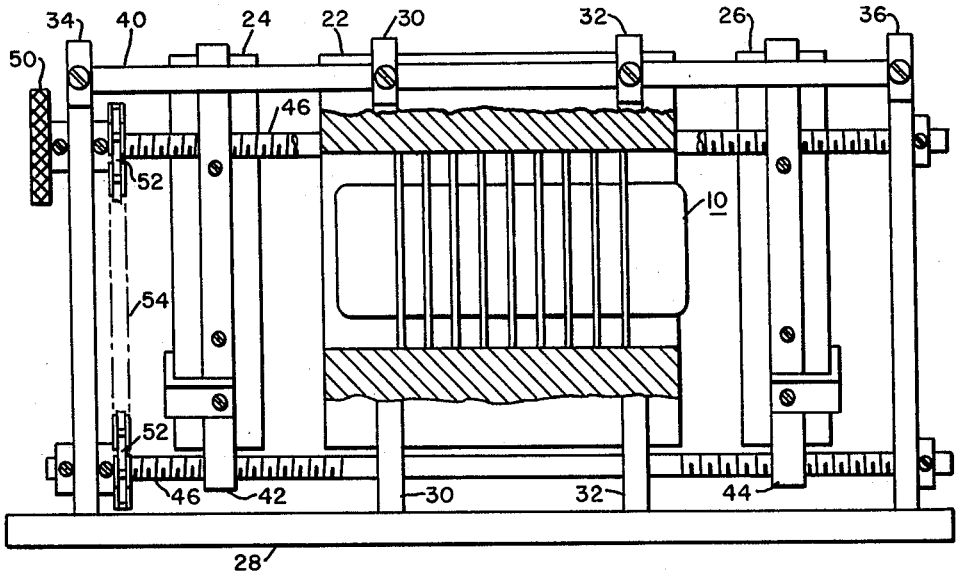

Fig. 1

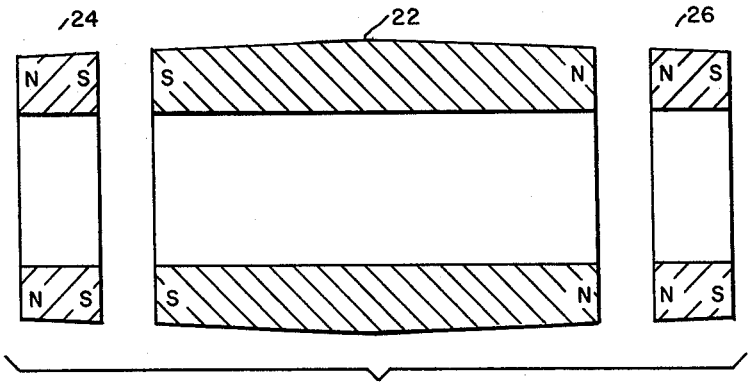

Fig. 2

WITNESSES

Leon J. Laza

James F. Young

INVENTOR

Gerhard W. Goetze

BY

Charles F. Renz

ATTORNEY