United States Patent [19]

Sherden

[11] **3,955,260**

[45] **May 11, 1976**

[54] **APPLICATOR FOR CEILING TEXTURE MATERIAL**

[76] Inventor: **Herbert O. Sherden,** 136 Berkshire Drive, Wheeling, Ill. 60090

[22] Filed: **July 16, 1975**

[21] Appl. No.: **596,393**

[52] **U.S. Cl.** ..... **29/121 R;** 15/230.11; 118/DIG. 15; 29/116 R

[51] **Int. Cl.**[2] **B21B 27/02**

[58] **Field of Search** ..... 29/113 R, 113 AD, 116 R, 29/121 R, 121 A, 121 H; 118/DIG. 15, DIG. 17; 15/230, 230.11, 230.16

[56] **References Cited**

UNITED STATES PATENTS

1,035,959	8/1912	Goldsmith	29/121 R X
1,573,594	2/1926	Winkenbach	29/116 R X
1,740,697	12/1929	McManus	118/DIG. 18
1,786,190	12/1930	Busch	29/121 H X
1,957,963	5/1934	Johnstone	29/121 H X
2,839,785	6/1958	Stevens	29/121 H X
3,154,830	11/1964	Juchniewicz	15/230.11 X
3,295,188	1/1967	Saueressig	29/113 R

Primary Examiner—Alfred R. Guest
Attorney, Agent, or Firm—Darbo, Robertson & Vandenburgh

[57] **ABSTRACT**

A roller type applicator has a plurality of spaced air pockets which project outwardly in the form of nodules. These air pockets are defined by a thin plastic film.
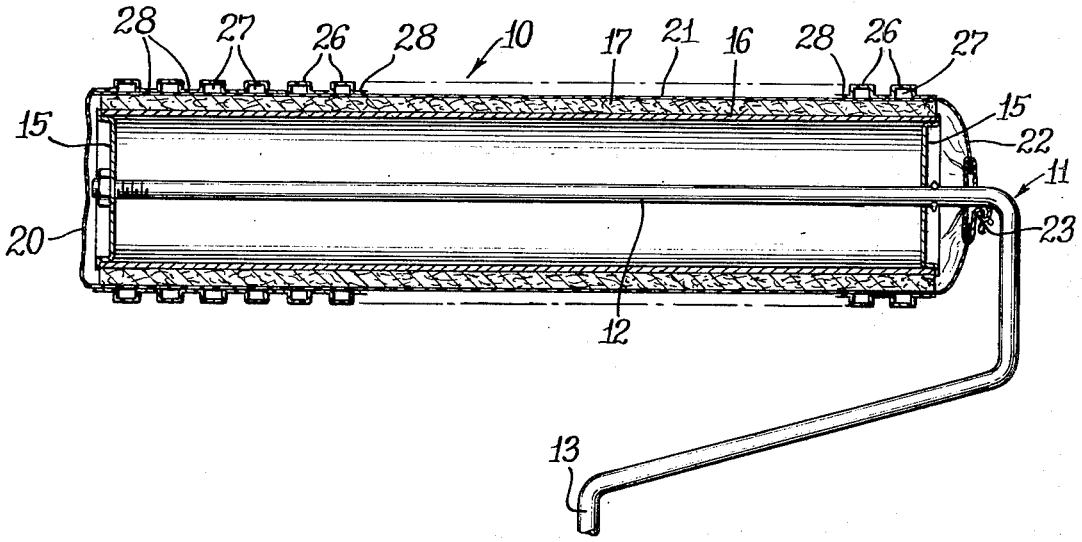
4 Claims, 5 Drawing Figures