METHOD OF AGGLOMERATING FOOD POWDER

Filed Dec. 26, 1967 4 Sheets-Sheet 1

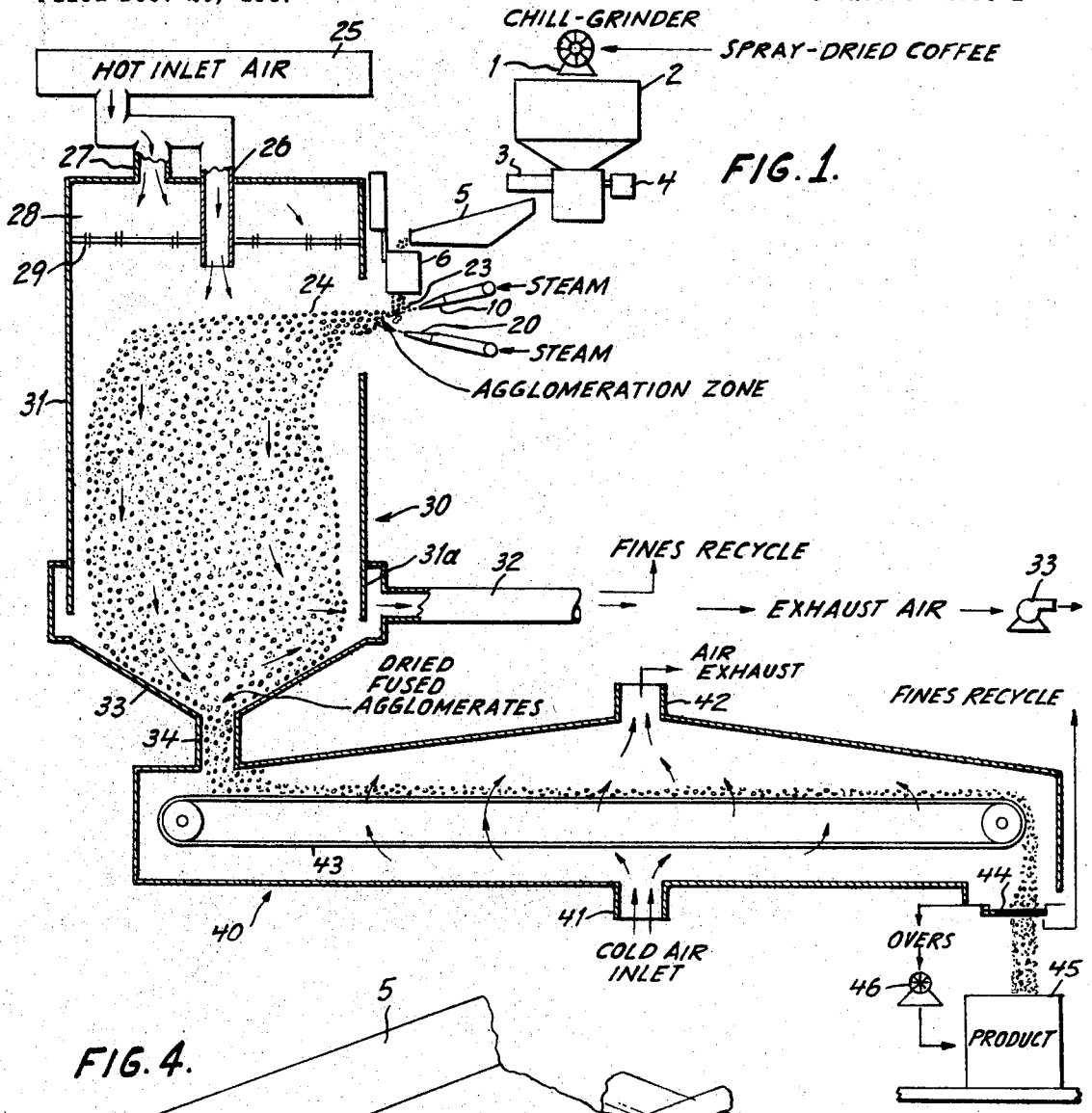

FIG. 1.

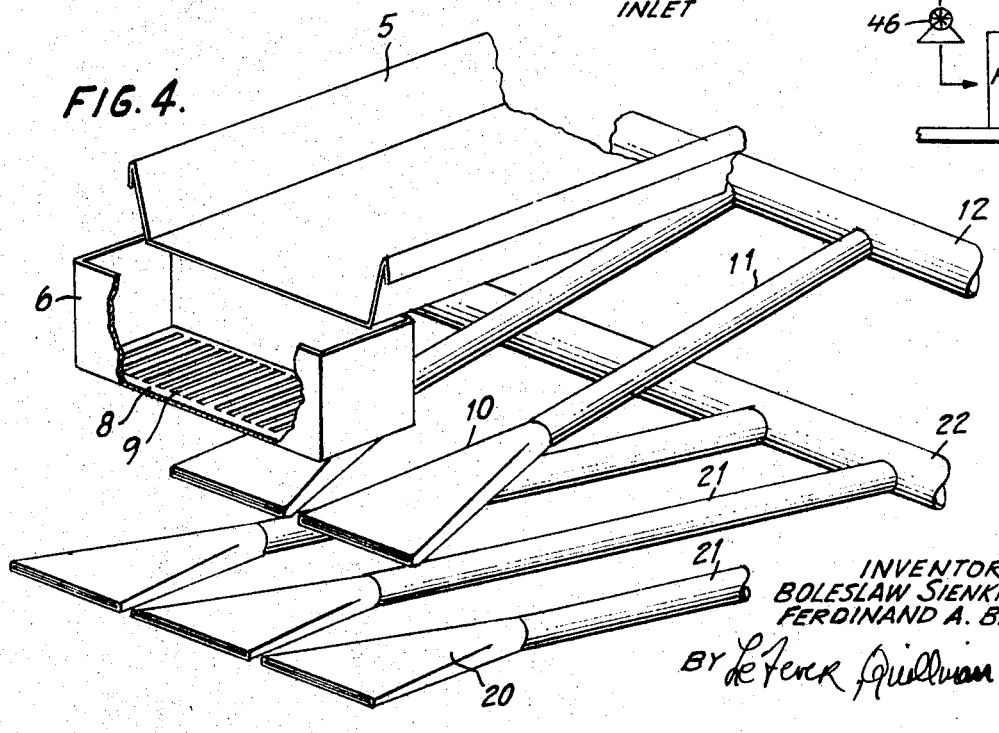

FIG. 4.

INVENTORS
BOLESLAW SIENKIEWICZ
FERDINAND A. BAGLEY
BY LeFever, Quillian & Husband