United States Patent [19]

Grayzel

[11] **Patent Number: 4,850,960**

[45] **Date of Patent: Jul. 25, 1989**

[54] **DIAGONALLY TAPERED, BEVELLED TIP INTRODUCING CATHETER AND SHEATH AND METHOD FOR INSERTION**

[76] Inventor: **Joseph Grayzel,** 262 Fountain Rd., Englewood, N.J. 07631

[21] Appl. No.: **71,040**

[22] Filed: **Jul. 8, 1987**

[51] **Int. Cl.**[4] **A61M 25/00**

[52] **U.S. Cl.** **604/53;** 128/343; 604/158; 604/280

[58] **Field of Search** 604/51–53, 604/158–170, 264, 280, 272–274; 128/343

[56] **References Cited**

U.S. PATENT DOCUMENTS

387,454	8/1888	Siegenthaler	604/164 X
2,269,823	1/1942	Kreiselman	128/207.15
2,512,569	6/1950	Saffir	604/272
2,828,744	4/1958	Hirsch et al.	604/165
3,093,134	6/1963	Roehr	604/272
3,204,634	9/1965	Koehn	604/164
3,395,711	8/1968	Plzak	128/200.26
3,401,687	9/1968	Hood	128/79
3,921,631	11/1975	Thompson	604/53
4,146,034	3/1979	Gupta	128/207.14
4,243,050	1/1981	Littleford	604/164 X
4,548,602	10/1985	Ring	604/280
4,581,025	4/1986	Timmermans	128/264
4,602,624	7/1986	Naples et al.	128/784
4,629,450	12/1986	Suzuki et al.	604/164
4,645,491	2/1987	Evans	604/273

Primary Examiner—Dalton L. Truluck
Attorney, Agent, or Firm—Weingram & Zall

[57] **ABSTRACT**

The present invention provides an improved introducing-dilating catheter which may also be applied to facilitate insertion of catheters of all types and functional purposes. The catheter has a tapered portion which is, in turn, connected to a bevelled tip portion to facilitate insertion of the catheter into a pre-existing puncture aperture. The bevelled tip portion is finished to remove any points capable of puncturing or any edges capable of injuring the tissues by the application of only a small force. Indicia means are provided to enable the practitioner using the introduction-dilation catheter to determine the orientation of the tip of the catheter so that the leading point of the bevelled tip will initiate engagement with the vascular puncture cut and enter the vessel in the acute angle formed between the guide wire and the vessel wall. Additionally, after entry of the entire tip, the indicia means allow the introducing catheter to be reoriented so as to keep the bevel parallel to the wall of a vessel.
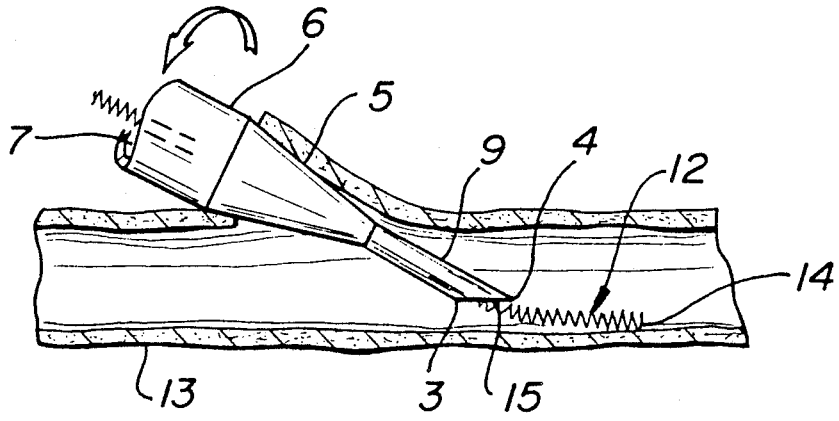
26 Claims, 3 Drawing Sheets