US008643260B1

(12) **United States Patent**
Nemeth et al.

(10) **Patent No.: US 8,643,260 B1**
(45) **Date of Patent: Feb. 4, 2014**

(54) **SYSTEMS AND METHODS FOR DISPLAY ASSEMBLIES HAVING PRINTED MASKING**

(75) Inventors: **Paul R. Nemeth**, Springville, IA (US); **Kyle P. Dotson**, Cedar Rapids, IA (US); **Ryan N. Klaassen**, Marion, IA (US); **Brad J. Covington**, Fairfax, IA (US)

(73) Assignee: **Rockwell Collins, Inc.**, Cedar Rapids, IA (US)

(*) Notice: Subject to any disclaimer, the term of this patent is extended or adjusted under 35 U.S.C. 154(b) by 228 days.

(21) Appl. No.: **13/224,701**

(22) Filed: **Sep. 2, 2011**

(51) **Int. Cl.**

H01J 5/16	(2006.01)
H01J 61/40	(2006.01)
H01J 1/26	(2006.01)
H01J 1/30	(2006.01)
H01J 9/00	(2006.01)
H01J 9/26	(2006.01)

(52) **U.S. Cl.**
USPC **313/117**; 313/110; 445/24; 445/25

(58) **Field of Classification Search**
USPC 313/110–117; 445/24–25
See application file for complete search history.

(56) **References Cited**

U.S. PATENT DOCUMENTS

3,616,197	A	10/1971	Amberg et al.
3,851,758	A	12/1974	Makhijani et al.
4,188,254	A	2/1980	Hemperly, Jr.
4,747,577	A	5/1988	Dimock
5,108,532	A	4/1992	Thein et al.
5,566,840	A	10/1996	Waldner et al.
5,592,288	A	1/1997	Sampica et al.
5,678,303	A	10/1997	Wichmann
5,918,517	A	7/1999	Malapert et al.
5,950,512	A	9/1999	Fields
6,128,066	A	10/2000	Yokozeki
6,388,724	B1	5/2002	Campbell et al.
6,481,482	B1	11/2002	Shimotomai
6,614,057	B2	9/2003	Silvernail et al.
6,681,668	B1	1/2004	Smirle
6,803,245	B2	10/2004	Auch et al.
6,832,538	B1	12/2004	Hwang
6,984,545	B2	1/2006	Grigg et al.
6,998,648	B2	2/2006	Silvernail
7,273,403	B2	9/2007	Yokota et al.
7,381,110	B1	6/2008	Sampica et al.
7,435,311	B1	10/2008	Marzen et al.

(Continued)

FOREIGN PATENT DOCUMENTS

JP	01-210328	8/1989
JP	05-200880	8/1993

(Continued)

OTHER PUBLICATIONS

U.S. Appl. No. 12/009,393, filed Jan. 18, 2008, Sampica et al.

(Continued)

Primary Examiner — Anne M Hines
Assistant Examiner — Jose M Diaz
(74) *Attorney, Agent, or Firm* — Donna P. Suchy; Daniel M. Barbieri

(57) **ABSTRACT**

A method of making a display assembly includes providing a display, providing a cover glass, ink jetting an ink covering onto a perimeter portion of the cover glass, and assembling the display to the cover glass to form the display assembly. The ink covering prevents light from leaking from the display through the perimeter portion of the cover glass.
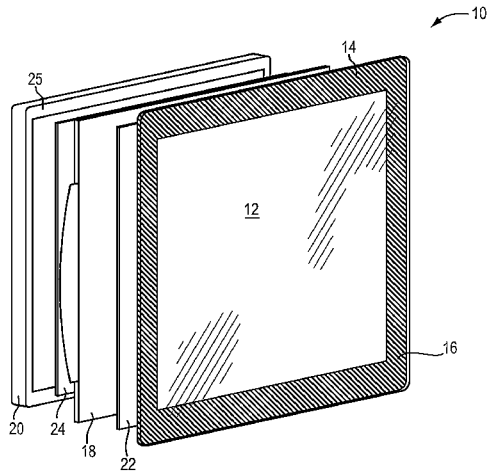
20 Claims, 5 Drawing Sheets