US009638260B2

(12) **United States Patent**
Brown

(10) **Patent No.: US 9,638,260 B2**
(45) **Date of Patent: May 2, 2017**

(54) **WHEEL SPINDLE DRIVE ELEMENT**

(71) Applicant: **Schaeffler Technologies AG & Co. KG**, Herzogenaurach (DE)

(72) Inventor: **Mark Brown**, Lakewood, OH (US)

(73) Assignee: **SCHAEFFLER TECHNOLOGIES AG & CO. KG**, Herzogenaurach (DE)

(*) Notice: Subject to any disclaimer, the term of this patent is extended or adjusted under 35 U.S.C. 154(b) by 108 days.

(21) Appl. No.: **14/492,445**

(22) Filed: **Sep. 22, 2014**

(65) **Prior Publication Data**

US 2015/0075939 A1 Mar. 19, 2015

Related U.S. Application Data

(62) Division of application No. 13/237,555, filed on Sep. 20, 2011, now Pat. No. 8,869,962.

(60) Provisional application No. 61/460,765, filed on Sep. 20, 2010.

(51) **Int. Cl.**

F16D 11/10	(2006.01)
F16D 1/072	(2006.01)
F16D 11/14	(2006.01)

(52) **U.S. Cl.**

CPC ***F16D 1/072*** (2013.01); ***F16D 11/10*** (2013.01); ***F16D 11/14*** (2013.01); *Y10T 29/49465* (2015.01); *Y10T 29/49826* (2015.01)

(58) **Field of Classification Search**

CPC F16D 1/072; F16D 11/10; F16D 11/14
USPC ..... 29/428, 457; 192/69.4, 69, 66.1, 69.9, 192/109 R

See application file for complete search history.

(56) **References Cited**

U.S. PATENT DOCUMENTS

1,922,929	A	8/1933	Chamberlain	
4,433,877	A	2/1984	Colanzi	
4,576,503	A	3/1986	Orain	
4,674,616	A *	6/1987	Mannino, Jr.	F16D 13/64 188/264 D
4,856,633	A	8/1989	Specht	
4,893,960	A	1/1990	Beier et al.	
5,616,970	A	4/1997	Dittrich	
5,740,895	A	4/1998	Bigley	
5,782,565	A	7/1998	Bertetti et al.	
5,853,250	A	12/1998	Krude et al.	
5,984,422	A	11/1999	Seifert	
6,042,935	A *	3/2000	Krenkel	C04B 35/573 156/329
6,109,411	A	8/2000	Bigley	
6,299,360	B1	10/2001	Dougherty et al.	
6,371,268	B1	4/2002	McMorris et al.	
6,942,082	B1	9/2005	Bunnow et al.	
6,994,136	B2	2/2006	Stanczak	
7,143,883	B2 *	12/2006	McCalla	F16D 3/223 192/109 R

(Continued)

FOREIGN PATENT DOCUMENTS

DE	10 2007 044 702 A1	4/2009
DE	10 2008 011 892 A1	9/2009

(Continued)

Primary Examiner — David J Hlavka
(74) *Attorney, Agent, or Firm* — Fitzpatrick, Cella, Harper & Scinto

(57) **ABSTRACT**

A wheel spindle drive element for a wheel disconnect system. The wheel spindle assembling onto an outer diameter of a spindle, displacing material to form a joint with high torque transmission characteristics.
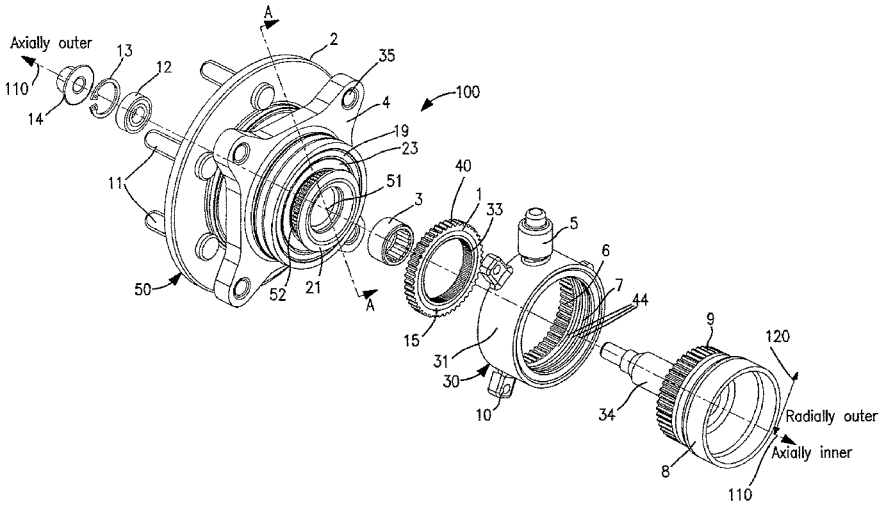
9 Claims, 8 Drawing Sheets