Nov. 14, 1933. G. G. PERKINS 1,935,060

MACHINE FOR COATING AND DISTRIBUTING CEMENT ON MATERIALS

Filed April 26, 1930 2 Sheets-Sheet 1

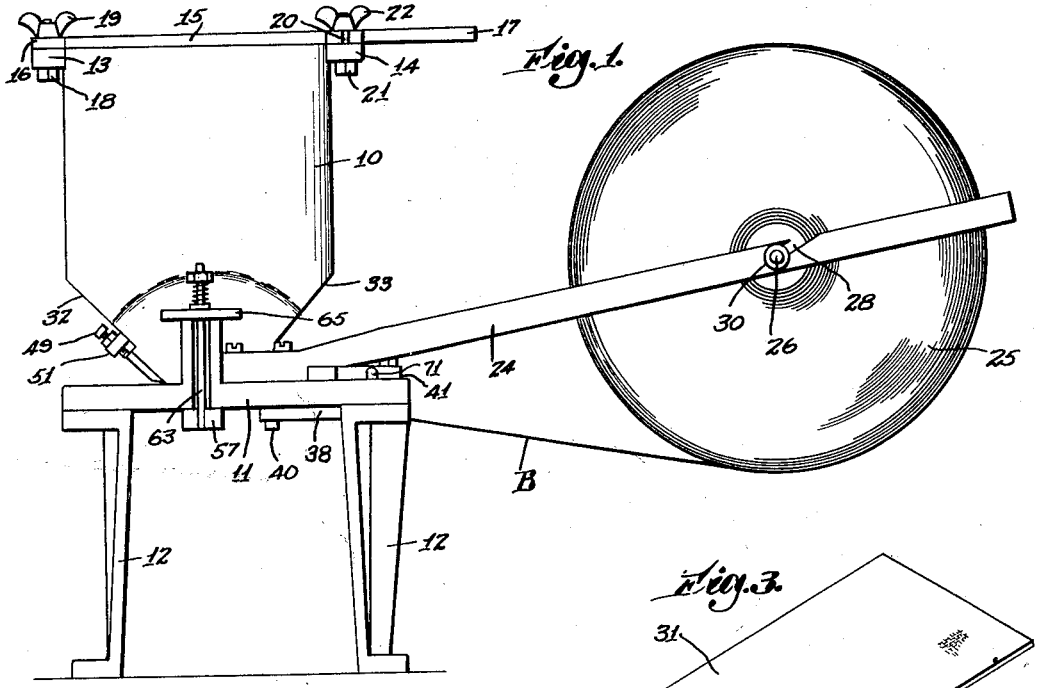

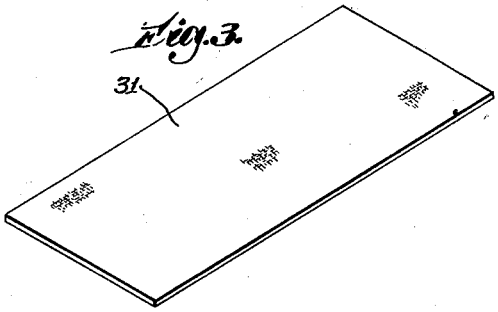

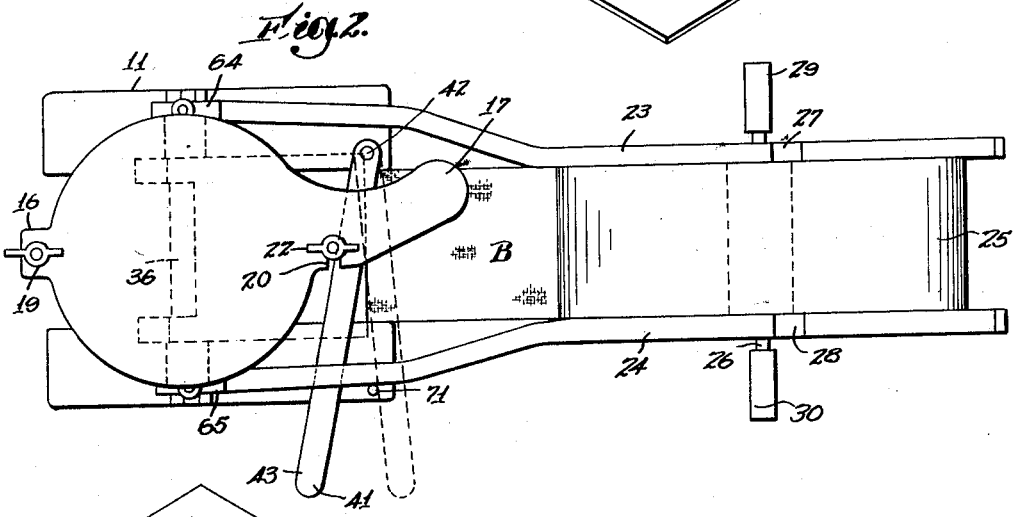

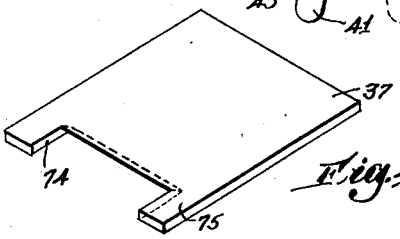

Fig. 4.

Inventor
George G. Perkins
by James R. Hodder
Attorney