PROXIMITY RESPONSIVE SYSTEM

Filed Feb. 24, 1964 2 Sheets-Sheet 2

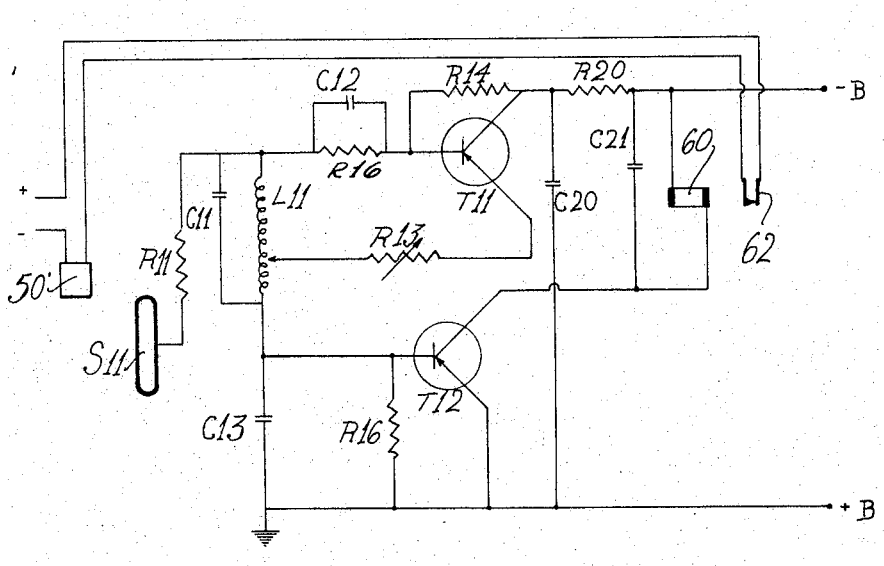

Fig. 3

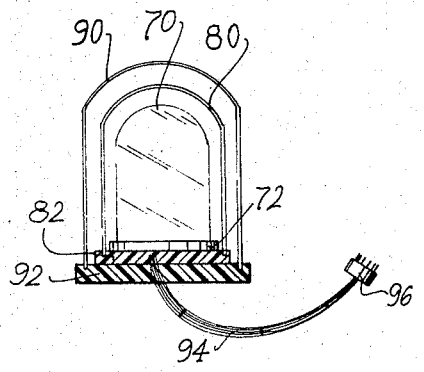

Fig. 4

INVENTOR.
ALFRED GORSKI
BY Benjamin J. Barnish
ATTORNEY