Feb. 18, 1969 L. D. ELY 3,428,460

CONTAINER TYPE STIRRER

Filed Aug. 5, 1965

Fig. 1

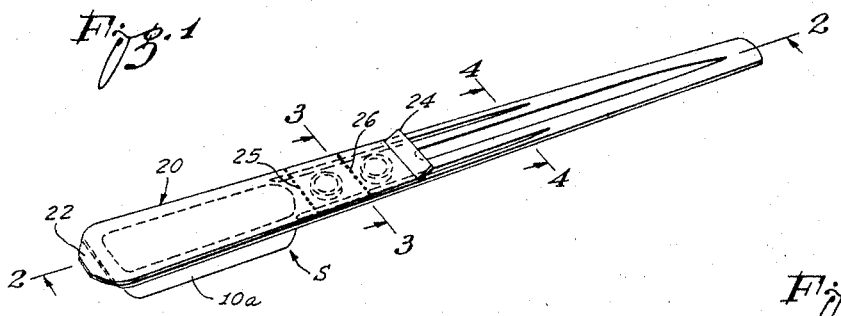


Fig. 2

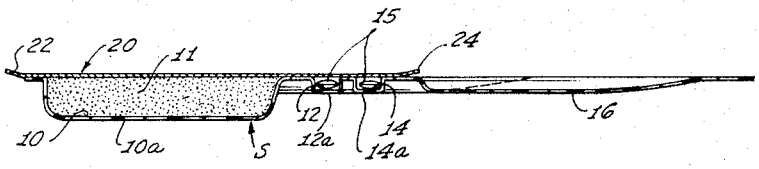


Fig. 3

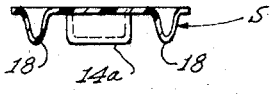


Fig. 4

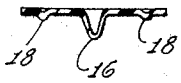


Fig. 5 (Underside)

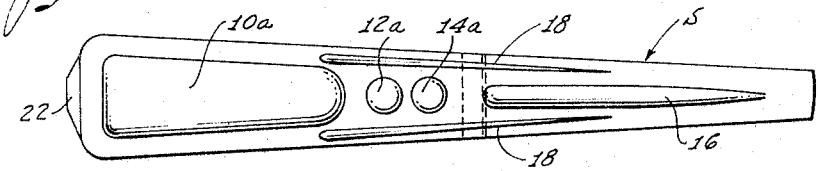


Fig. 6

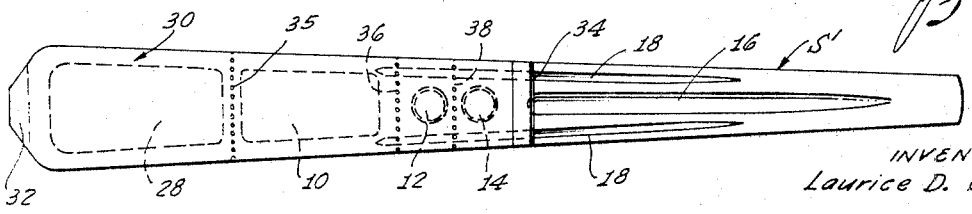


INVENTOR:
Laurice D. Ely

By Smyth, Roston & Pavitt
Attorneys