US005625460A

United States Patent [19]

Tai

[11] Patent Number: 5,625,460

[45] Date of Patent: *Apr. 29, 1997

[54] **METHOD AND APPARATUS FOR LOCALLY SWITCHING GRAY DOT TYPES TO REPRODUCE AN IMAGE WITH GRAY LEVEL PRINTING**

[75] Inventor: **Hwai T. Tai**, Rochester, N.Y.

[73] Assignee: **Eastman Kodak Company**, Rochester, N.Y.

[*] Notice: The term of this patent shall not extend beyond the expiration date of Pat. No. 5,200,831.

[21] Appl. No.: **164,274**

[22] Filed: **Dec. 9, 1993**

[51] **Int. Cl.**[6] **H04N 1/23**

[52] **U.S. Cl.** **358/298**; 358/455; 358/456; 358/462

[58] **Field of Search** 358/296, 298, 358/455–466, 534–536

[56] **References Cited**

U.S. PATENT DOCUMENTS

4,593,325	6/1986	Kannapell et al.	358/466
4,741,046	4/1988	Matsunawa et al.	358/456
4,814,886	3/1989	Kuge et al.	358/298
5,075,780	12/1991	Shibahara	358/298
5,161,036	11/1992	Mannichi et al.	358/466

Primary Examiner—Stephen Brinich
Attorney, Agent, or Firm—Norman Rushefsky

[57] **ABSTRACT**

A method and arrangement for reproducing an original image scans an original image to digitize the image so as to produce a digitized image signal, and collects statistical information of dot regions from the digitized image signal. For each dot region of the digitized image signal, a dot type is selected to render that dot region in accordance with the statistical information, the dot type being either a mixed dot type or one of a fixed threshold or a dot type mathematically modified from said mixed dot type. A printer is controlled to print the digitized image signal by rendering the dot regions in accordance with the selected dot type for each dot region, so that an original image that may contain different types of image regions is satisfactorily reproduced. In order to reduce printer moire patterns indexes to the threshold masks may be modified to avoid rigid threshold mask patterns from being used.
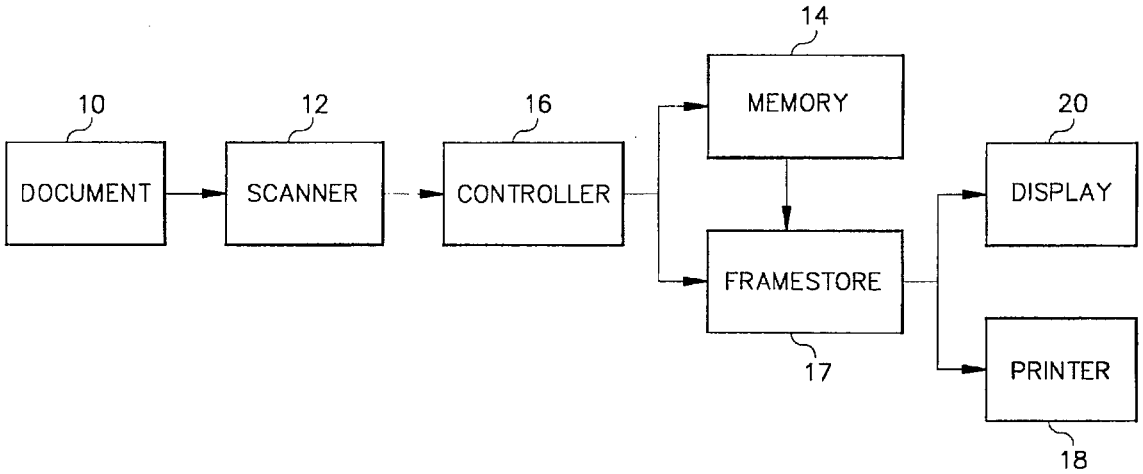
18 Claims, 9 Drawing Sheets