US009410860B2

(12) **United States Patent**
Shea

(10) **Patent No.: US 9,410,860 B2**
(45) **Date of Patent: Aug. 9, 2016**

(54) **WASHER ASSEMBLY AND JOINT MONITORING SYSTEM EMPLOYING THE SAME**

(71) Applicant: **EATON CORPORATION**, Cleveland, OH (US)

(72) Inventor: **John J. Shea**, Pittsburgh, PA (US)

(73) Assignee: **EATON CORPORATION**, Cleveland, OH (US)

(*) Notice: Subject to any disclaimer, the term of this patent is extended or adjusted under 35 U.S.C. 154(b) by 927 days.

(21) Appl. No.: **13/670,820**

(22) Filed: **Nov. 7, 2012**

(65) **Prior Publication Data**

US 2014/0129158 A1 May 8, 2014

(51) **Int. Cl.**

G01R 15/00	(2006.01)
G01L 5/24	(2006.01)
G01L 1/14	(2006.01)
G01F 23/26	(2006.01)
G01M 13/00	(2006.01)

(52) **U.S. Cl.**

CPC ***G01L 5/243*** (2013.01); ***G01L 1/142*** (2013.01); *G01F 23/263* (2013.01); *G01M 13/005* (2013.01)

(58) **Field of Classification Search**

USPC 702/57

See application file for complete search history.

(56) **References Cited**

U.S. PATENT DOCUMENTS

7,412,898	B1 *	8/2008	Smith et al.	73/761
2007/0193361	A1 *	8/2007	Coffey et al.	73/780
2007/0205776	A1 *	9/2007	Harish et al.	324/662
2009/0120198	A1 *	5/2009	Dallenbach et al.	73/780
2012/0013471	A1	1/2012	Jones	
2013/0106197	A1 *	5/2013	Bae et al.	307/104
2014/0080409	A1 *	3/2014	Frankland et al.	455/41.1

FOREIGN PATENT DOCUMENTS

DE	19831372	A1	1/2000
DE	10138261	A1	2/2003
DE	102009043267	A1	4/2011

OTHER PUBLICATIONS

European Patent Office, "International Search Report and Written Opinion", Nov. 27, 2013, 10 pp.

* cited by examiner

Primary Examiner — Paul D Lee

(74) *Attorney, Agent, or Firm* — Eckert Seamans Cherin & Mellott, LLC; Grant E. Coffield; Nathaniel C. Wilks

(57) **ABSTRACT**

A washer assembly is for use with a fastener. The washer assembly includes a first conductive portion, a second conductive portion, and an insulating portion disposed between the first conductive portion and the second conductive portion. The first conductive portion, the second conductive portion, and the insulating portion form a variable capacitor having a capacitance based on an amount of force applied thereto by the fastener. A wireless transponder unit includes a control unit electrically connected to the variable capacitor and an antenna electrically connected to the control unit. The control unit is configured to sense the capacitance of the variable capacitor, to generate information representing the capacitance, and to output the information to a wireless reader unit via the antenna.
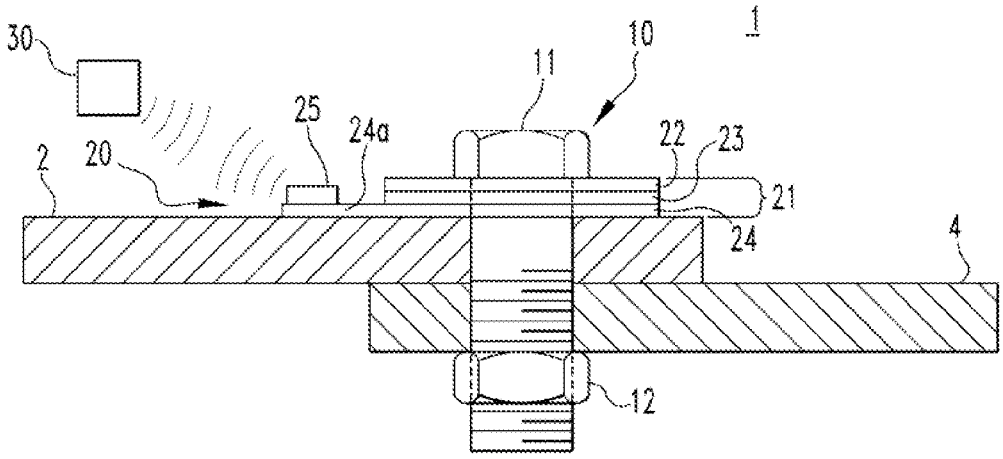
21 Claims, 5 Drawing Sheets