US009409760B1

(12) **United States Patent**
Lichtefeld, Sr.

(10) **Patent No.: US 9,409,760 B1**
(45) **Date of Patent: Aug. 9, 2016**

(54) **FLUID DISPENSER**

(71) Applicant: **Paul Lichtefeld, Sr.**, Louisville, KY (US)

(72) Inventor: **Paul Lichtefeld, Sr.**, Louisville, KY (US)

(*) Notice: Subject to any disclaimer, the term of this patent is extended or adjusted under 35 U.S.C. 154(b) by 0 days.

(21) Appl. No.: **14/097,964**

(22) Filed: **Dec. 5, 2013**

(51) **Int. Cl.**

B67B 3/00	(2006.01)
B65D 25/48	(2006.01)
B67B 7/44	(2006.01)
B67D 3/00	(2006.01)
B65D 77/06	(2006.01)
B67B 7/00	(2006.01)
B65D 47/06	(2006.01)
B65D 47/08	(2006.01)
B65D 47/30	(2006.01)

(52) **U.S. Cl.**

CPC ***B67D 3/0061*** (2013.01); ***B65D 25/48*** (2013.01); ***B65D 47/065*** (2013.01); ***B65D 47/0804*** (2013.01); ***B65D 47/305*** (2013.01); ***B65D 77/067*** (2013.01); ***B65D 77/068*** (2013.01); ***B67B 7/24*** (2013.01); ***B67B 7/26*** (2013.01); ***B67B 7/44*** (2013.01)

(58) **Field of Classification Search**

CPC B67B 7/26; B67B 7/24; B67B 7/44; B65D 25/48; B65D 47/043; B65D 47/0804; B65D 77/067; B65D 77/068; B65D 47/305; B65D 47/065; B67D 3/0061

USPC 222/80–81, 83, 89–91, 556

See application file for complete search history.

(56) **References Cited**

U.S. PATENT DOCUMENTS

163,293	A		5/1875	Banker	
186,175	A		1/1877	Snyder	
1,041,699	A		10/1912	Thompson, Jr.	
1,209,438	A	*	12/1916	Houston	222/91
1,826,838	A	*	10/1931	Stump et al.	222/90
1,988,000	A		6/1933	Estler	
2,012,396	A		7/1933	Luce	
2,414,911	A		2/1944	Temple	
2,373,373	A		4/1945	Berg	
3,333,737	A	*	8/1967	Molineux	222/91
3,549,049	A	*	12/1970	Weber	222/91
3,768,698	A	*	10/1973	Corty et al.	222/91
4,322,018	A	*	3/1982	Rutter	222/83
4,623,077	A	*	11/1986	Swartzbaugh	222/517
4,645,100	A	*	2/1987	Wells	222/505
4,712,714	A	*	12/1987	Mucciarone	222/91
4,723,689	A	*	2/1988	Vallos et al.	222/91
4,984,711	A		1/1991	Ellis	
5,090,596	A	*	2/1992	Knight	222/91
5,094,361	A	*	3/1992	Dubach	222/81
5,392,968	A	*	2/1995	Dark	B65D 47/066 222/528
5,655,684	A	*	8/1997	Krall	222/91
6,053,360	A		4/2000	Rutter	
6,161,728	A	*	12/2000	Dark	B65D 47/36 222/153.07
7,152,767	B2	*	12/2006	Seelhofer	B65D 5/727 222/536
7,828,140	B2	*	11/2010	Lee	B65D 47/063 206/219
8,353,428	B2		1/2013	Pritchard	
2013/0008926	A1		1/2013	Bell	

* cited by examiner

Primary Examiner — Frederick C Nicolas
(74) *Attorney, Agent, or Firm* — Middleton Reutlinger

(57) **ABSTRACT**

The present invention comprises a dispenser for accessing and removing residual fluid from a container that includes a base portion having a chamber therein for containing the fluid, a piercing member extending from the base portion for piercing the container to access the fluid within, and an aperture in the piercing member whereby the fluid flows through the aperture into the base portion. A fluid outlet in the base portion is provided for removing fluid therefrom.
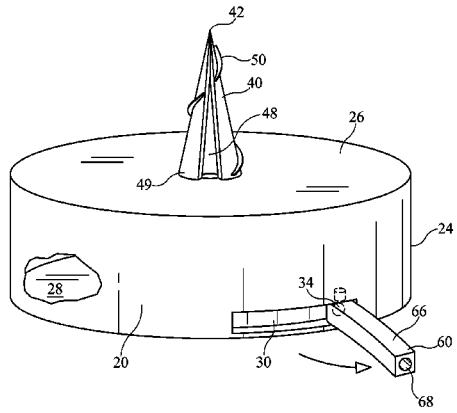
7 Claims, 8 Drawing Sheets