US009409060B2

(12) **United States Patent**
Ishii et al.

(10) **Patent No.: US 9,409,060 B2**
(45) **Date of Patent: Aug. 9, 2016**

(54) **MULTILAYER SOLID GOLF BALL**

(75) Inventors: **Hideyuki Ishii**, Portland, OR (US); **Yutaka Kabeshita**, Portland, OR (US); **Hsin Cheng**, Yun-lin Hsien (TW); **Chien-Hsin Chou**, Yun-lin Hsien (TW); **Chen-Tai Liu**, Yun-lin Hsien (TW)

(73) Assignee: **NIKE, Inc.**, Beaverton, OR (US)

(*) Notice: Subject to any disclaimer, the term of this patent is extended or adjusted under 35 U.S.C. 154(b) by 982 days.

(21) Appl. No.: **13/404,687**

(22) Filed: **Feb. 24, 2012**

(65) **Prior Publication Data**

US 2012/0214615 A1 Aug. 23, 2012

Related U.S. Application Data

(63) Continuation-in-part of application No. 12/230,272, filed on Aug. 27, 2008, now abandoned.

(51) **Int. Cl.**

A63B 37/06	(2006.01)
A63B 37/00	(2006.01)
A63B 37/02	(2006.01)

(52) **U.S. Cl.**

CPC ***A63B 37/0075*** (2013.01); ***A63B 37/0003*** (2013.01); ***A63B 37/004*** (2013.01); ***A63B 37/0039*** (2013.01); ***A63B 37/0045*** (2013.01); ***A63B 37/0051*** (2013.01); ***A63B 37/0061*** (2013.01); ***A63B 37/0062*** (2013.01); ***A63B 37/0064*** (2013.01); ***A63B 37/0076*** (2013.01); ***A63B 37/0078*** (2013.01); ***A63B 37/02*** (2013.01)

(58) **Field of Classification Search**

CPC A63B 37/0039; A63B 37/0059; A63B 37/0061

USPC 473/376, 373, 374

See application file for complete search history.

(56) **References Cited**

U.S. PATENT DOCUMENTS

6,183,382	B1 *	2/2001	Kim et al.	473/374
6,653,382	B1	11/2003	Statz et al.	
7,009,002	B2	3/2006	Rajagopalan et al.	
7,651,415	B2	1/2010	Ladd et al.	
7,753,810	B2	7/2010	Sullivan et al.	
2006/0172823	A1 *	8/2006	Loper et al.	473/371
2010/0056302	A1	3/2010	Cheng et al.	
2012/0115637	A1	5/2012	Ishii et al.	

* cited by examiner

Primary Examiner — Raeann Gorden

(74) *Attorney, Agent, or Firm* — Honigman Miller Schwartz and Cohn LLP

(57) **ABSTRACT**

A multilayer solid golf ball may include a core formed from a highly neutralized polymer and a cover surrounding the core. The ball may also include an enclosing layer disposed between the core and the cover, the enclosing layer having a thermal conductivity of 0.12 W/m-K or less.
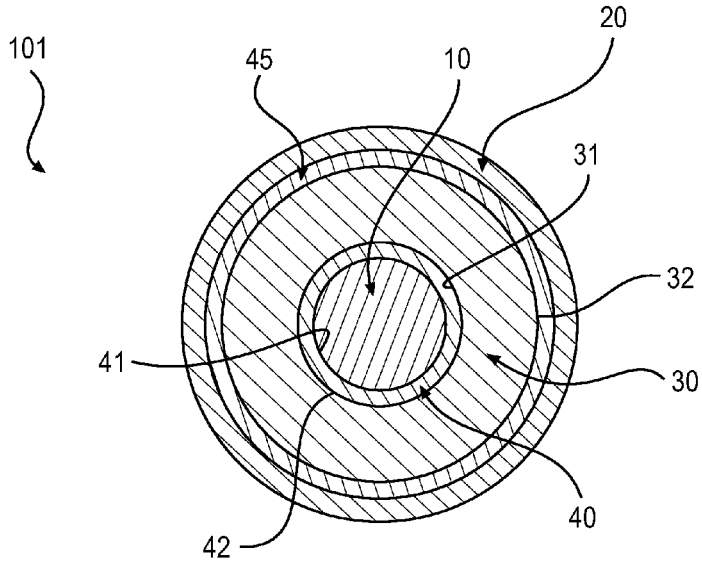
16 Claims, 2 Drawing Sheets