TAPING MACHINE

Filed Feb. 2, 1965 4 Sheets-Sheet 2

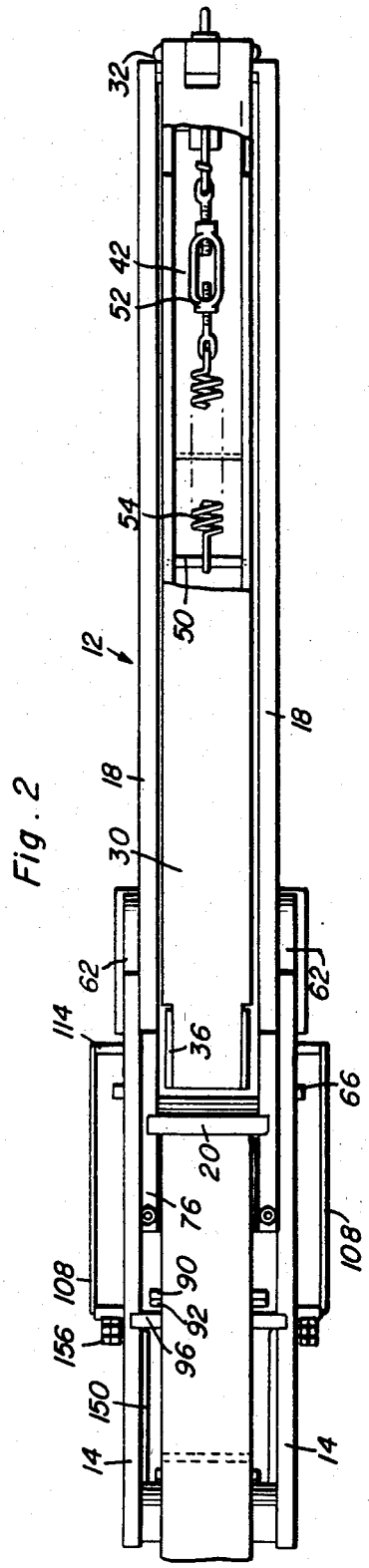

Fig. 2

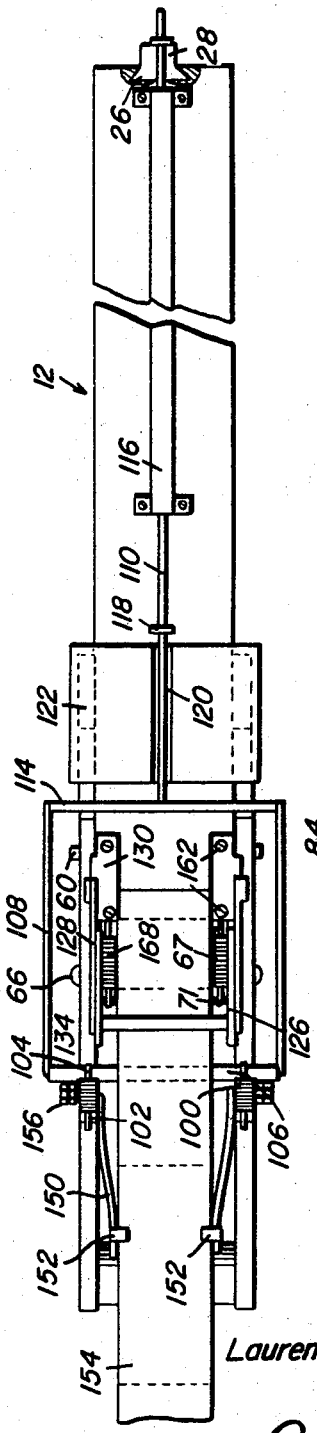

Fig. 3

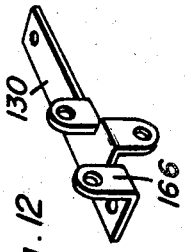

Fig. 12

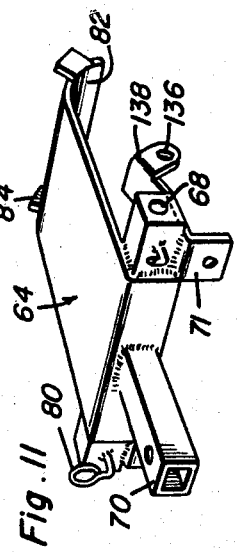

Fig. 11

Laurence L. Taylor, Jr.
INVENTOR.
BY Clarence A. O'Brien and Harvey B. Jacobson
Attorneys