United States Patent [19]

Narishima et al.

[11] **Patent Number: 4,703,160**

[45] **Date of Patent: Oct. 27, 1987**

[54] **CASING STRUCTURE OF PORTABLE ELECTRONIC APPLIANCE**

[75] Inventors: **Wataru Narishima; Shoji Takeuchi,** both of Tokyo, Japan

[73] Assignee: **Texas Instruments Incorporated,** Dallas, Tex.

[21] Appl. No.: **872,291**

[22] Filed: **Jun. 9, 1986**

[30] **Foreign Application Priority Data**

Jun. 14, 1985 [JP] Japan 60-129402

[51] **Int. Cl.**[4] **G06C 5/02**

[52] **U.S. Cl.** ..... **235/1 D;** 200/5 A; 206/305; 220/339; 364/708

[58] **Field of Search** ..... 235/1 D; 206/305; 220/339; 150/52 R; 200/5 A; 361/398; 364/705, 708, 900

[56] **References Cited**

U.S. PATENT DOCUMENTS

4,028,509	6/1977	Zurchen	200/5 A
4,044,980	8/1977	Cummins	220/339 X
4,066,851	1/1978	White et al.	200/5 A
4,068,924	1/1978	Kotani	235/1 D X
4,075,702	2/1978	Davies	206/305 X
4,096,577	6/1978	Ferber et al.	361/398 X
4,259,568	3/1981	Dynesen	235/1 D
4,314,117	2/1982	Ditzig	361/398 X
4,336,529	6/1982	Buan	200/5 A X
4,517,660	5/1985	Fushimoto et al.	200/5 A X

Primary Examiner—Benjamin R. Fuller

Attorney, Agent, or Firm—Richard Bachand; Melvin Sharp; Rhys Merrett

[57] **ABSTRACT**

A unital casing structure of a portable electronic appliance such as a handheld or desktop calculator, comprising at least two panel sections having a straight boundary line therebetween and integrally coupled together across the boundary line whereby the panel sections are foldable with respect to each other about an axis extending along the boundary line between the panel sections so that the two panel sections are coupled together in a face-to-face relationship. The casing structure may further comprise an intermediate panel section bridging the two panel sections, the intermediate panel section being angularly movable with respect to the two panel sections about two axes parallel with and spaced apart across the boundary line between the panel section and being foldable with respect to each of the two panel sections about each of the two axes.
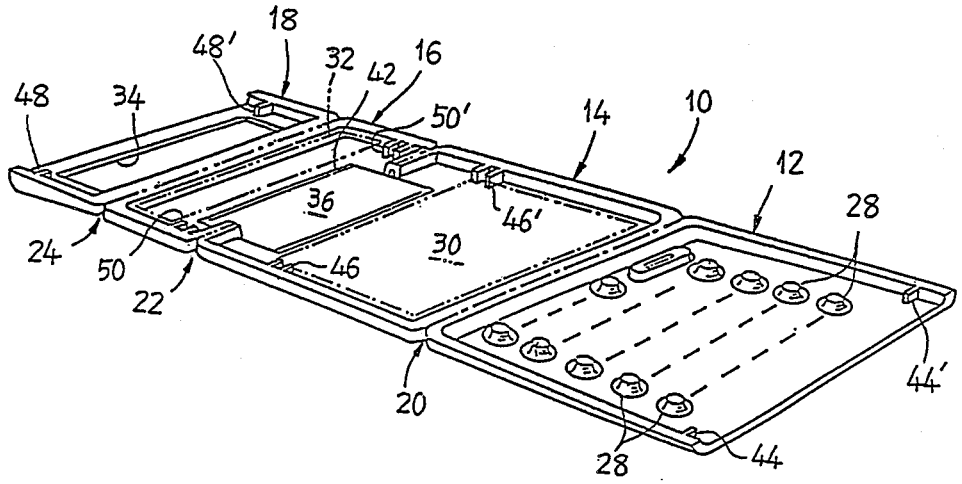
5 Claims, 10 Drawing Figures