FIG. 1
PRIOR ART

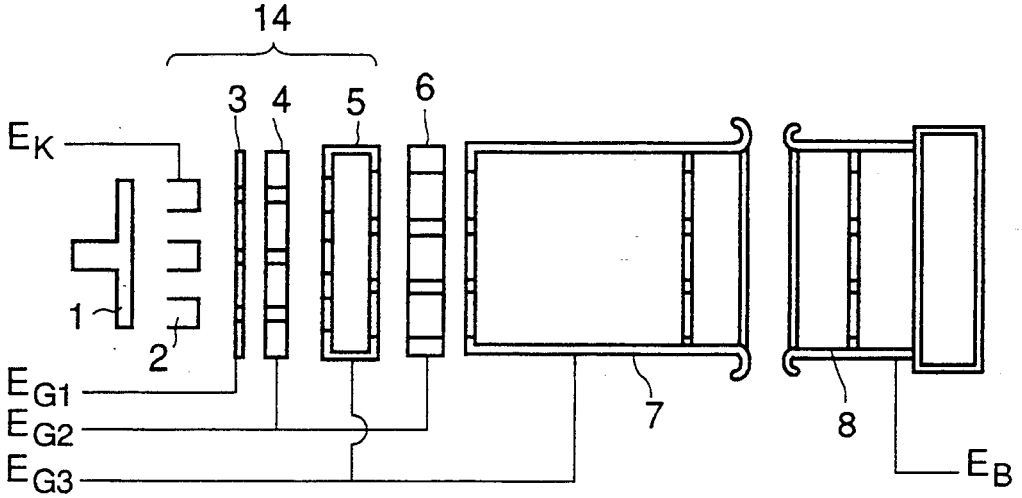
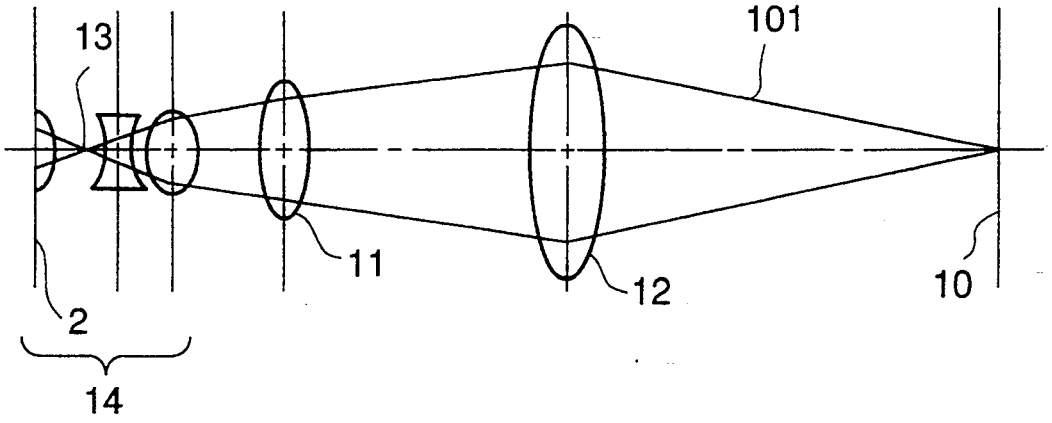
FIG. 2
PRIOR ART