US006783159B2

(12) **United States Patent**
Tuttle et al.

(10) **Patent No.: US 6,783,159 B2**
(45) **Date of Patent: Aug. 31, 2004**

(54) **COMPACT RETRACTABLE LABEL**

(75) Inventors: **Erick J. Tuttle**, Fort Collins, CO (US); **Arlen L. Roesner**, Fort Collins, CO (US)

(73) Assignee: **Hewlett-Packard Development Company, L.P.**, Houston, TX (US)

(*) Notice: Subject to any disclaimer, the term of this patent is extended or adjusted under 35 U.S.C. 154(b) by 31 days.

(21) Appl. No.: **10/285,907**

(22) Filed: **Oct. 31, 2002**

(65) **Prior Publication Data**

US 2004/0084897 A1 May 6, 2004

(51) **Int. Cl.**[7] **B42D 15/00**

(52) **U.S. Cl.** **283/81**; 156/357; 156/571; 283/117

(58) **Field of Search** 283/81, 101, 117; 156/567, 568, 569, 570, 571, 572, 357

(56) **References Cited**

U.S. PATENT DOCUMENTS

3,867,233 A * 2/1975 Eder et al. 156/571
4,226,660 A * 10/1980 Carter 156/357
4,302,277 A * 11/1981 Ilsemann 156/567
5,276,435 A 1/1994 Rossides
5,715,136 A 2/1998 Noe et al.
5,822,182 A 10/1998 Scholder et al.
5,864,126 A 1/1999 Hutton, Jr.
6,129,388 A 10/2000 Bromberg
6,148,419 A 11/2000 Ahrens et al.
6,301,622 B1 10/2001 Kim et al.
6,418,651 B1 7/2002 Joliey
6,689,243 B2 * 2/2004 Scott et al. 156/215
2001/0021474 A1 9/2001 Hamada
2002/0043011 A1 4/2002 Edwards
2002/0084020 A1 * 7/2002 Scott et al. 156/215

* cited by examiner

Primary Examiner—Monica S. Carter
(74) *Attorney, Agent, or Firm*—Kevin M. Hart

(57) **ABSTRACT**

A compact retractable label assembly includes a flexible label tongue and a guide bracket for receiving the label tongue. The guide bracket is adapted to mount to the inside of an enclosure surface such that the label tongue may be pulled from a mouth of the bracket to the outside of the enclosure surface. The guide bracket has a curved profile so that the label tongue bends when it is pushed inside the enclosure. The bend in the excursion path of the label tongue preserves space inside the enclosure.
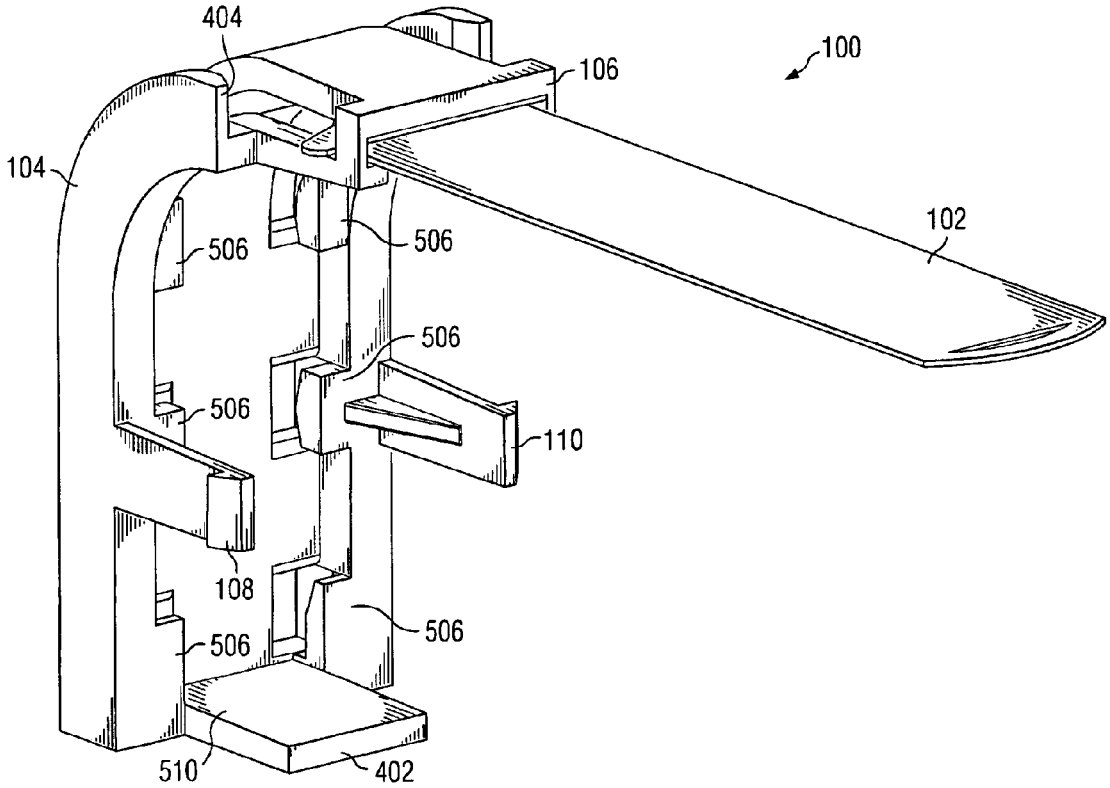
9 Claims, 9 Drawing Sheets