US009680059B2

(12) **United States Patent**
Chiu et al.

(10) **Patent No.: US 9,680,059 B2**
(45) **Date of Patent: Jun. 13, 2017**

(54) **FLIP CHIP LIGHT EMITTING DIODE AND METHOD FOR MANUFACTURING THE SAME**

(71) Applicant: **ADVANCED OPTOELECTRONIC TECHNOLOGY, INC.**, Hsinchu Hsien (TW)

(72) Inventors: **Ching-Hsueh Chiu**, Hsinchu (TW); **Ya-Wen Lin**, Hsinchu (TW); **Po-Min Tu**, Hsinchu (TW); **Shih-Cheng Huang**, Hsinchu (TW)

(73) Assignee: **ADVANCED OPTOELECTRONIC TECHNOLOGY, INC.**, Hsinchu Hsien (TW)

(*) Notice: Subject to any disclaimer, the term of this patent is extended or adjusted under 35 U.S.C. 154(b) by 0 days.

(21) Appl. No.: **14/692,455**

(22) Filed: **Apr. 21, 2015**

(65) **Prior Publication Data**

US 2015/0311413 A1 Oct. 29, 2015

(30) **Foreign Application Priority Data**

Apr. 24, 2014 (CN) 2014 1 0167575

(51) **Int. Cl.**
H01L 33/58 (2010.01)
H01L 33/00 (2010.01)
(Continued)

(52) **U.S. Cl.**
CPC ***H01L 33/22*** (2013.01); ***G02B 1/11*** (2013.01); ***H01L 21/302*** (2013.01); ***H01L 33/005*** (2013.01); ***H01L 33/0079*** (2013.01); ***H01L 33/44*** (2013.01); ***H01L 33/58*** (2013.01); *H01L 2224/14* (2013.01); *H01L 2224/16225* (2013.01)

(58) **Field of Classification Search**
CPC ... H01L 33/005; H01L 33/0079; H01L 33/22; H01L 33/44; H01L 33/58; H01L 21/302
USPC 257/13, 79, 88, 98, E33.005, E33.059, 257/E33.067, E33.068, E21.219, E21.318; 359/601; 438/27, 29, 46, 694
See application file for complete search history.

(56) **References Cited**

U.S. PATENT DOCUMENTS

8,288,781 B2 * 10/2012 Seo H01L 27/156 257/88
8,641,212 B2 * 2/2014 Park G02B 1/118 359/599

(Continued)

FOREIGN PATENT DOCUMENTS

CN 102234183 A 11/2011
CN 103117347 A 5/2013

(Continued)

Primary Examiner — Dao H Nguyen
(74) *Attorney, Agent, or Firm* — Steven Reiss

(57) **ABSTRACT**

A flip-chip light emitting diode, including a substrate, an N-type semiconductor layer, a light emitting layer and a P-type semiconductor layer series mounted along a height direction of the flip-chip light emitting diode. A P electrode is formed on the P-type semiconductor layer and an N electrode is formed on the N-type semiconductor. A top surface of the substrate is away from the light emitting layer. A plurality of micron main portions is formed on the top surface. An outer surface of each main body has a plurality of nanometer protrusions. A method for manufacturing the flip chip light emitting diode is also provided.
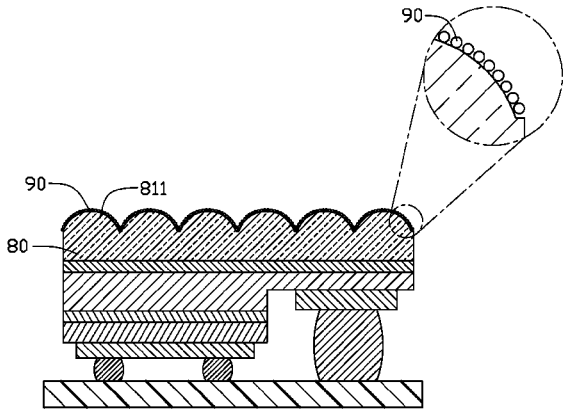
1 Claim, 9 Drawing Sheets