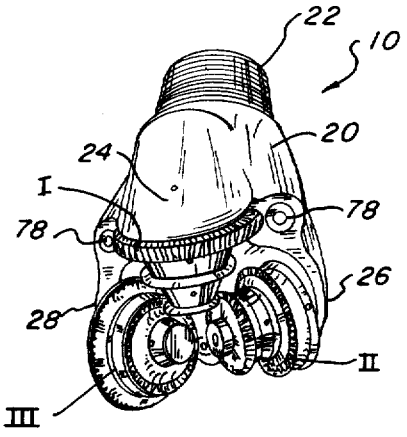

Fig_1

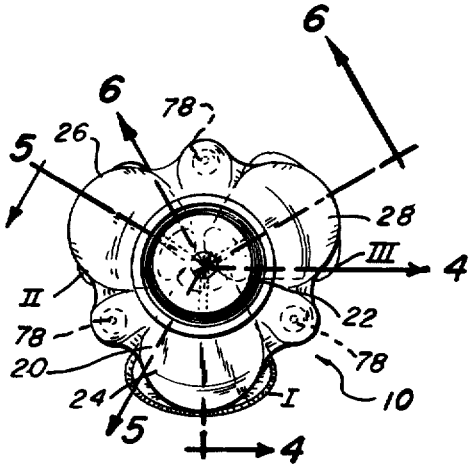

Fig_3

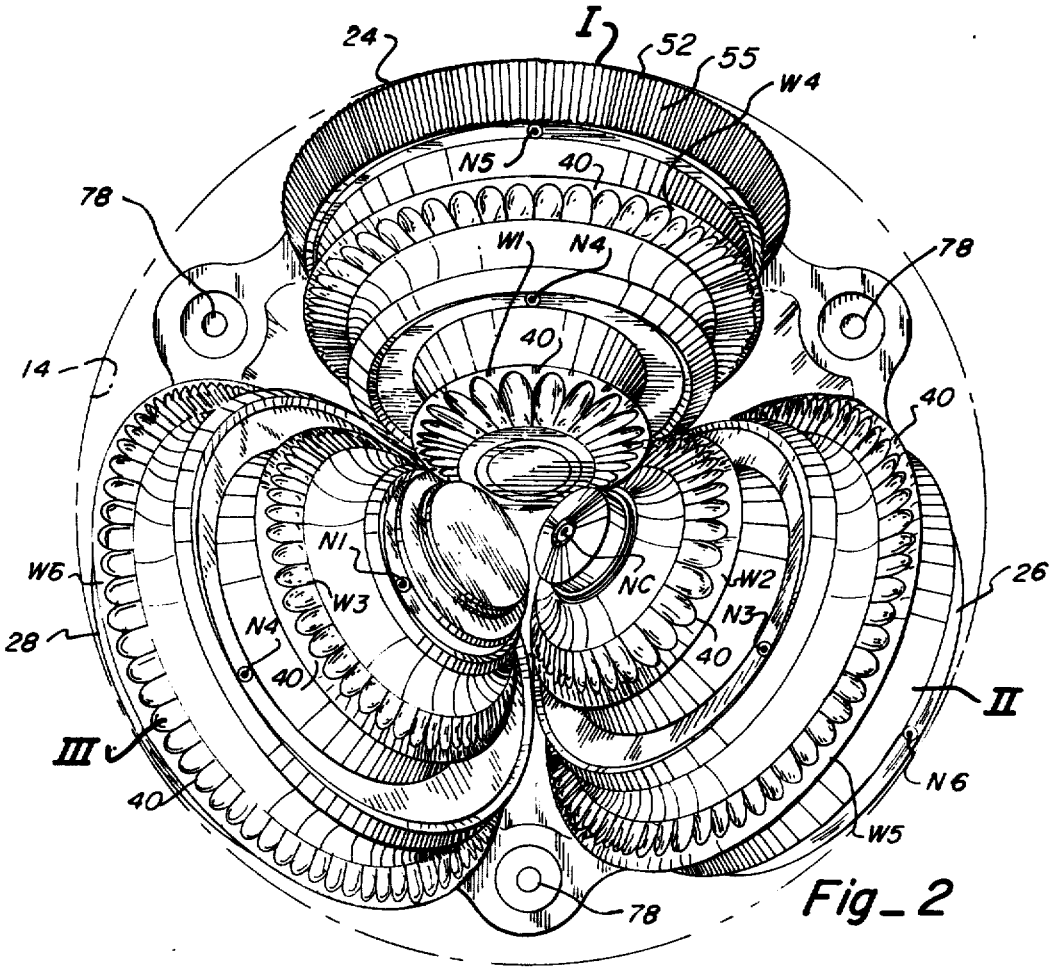

Fig_2